SRT304 AND SRT366 MANIFOLD VIEW

SRT304

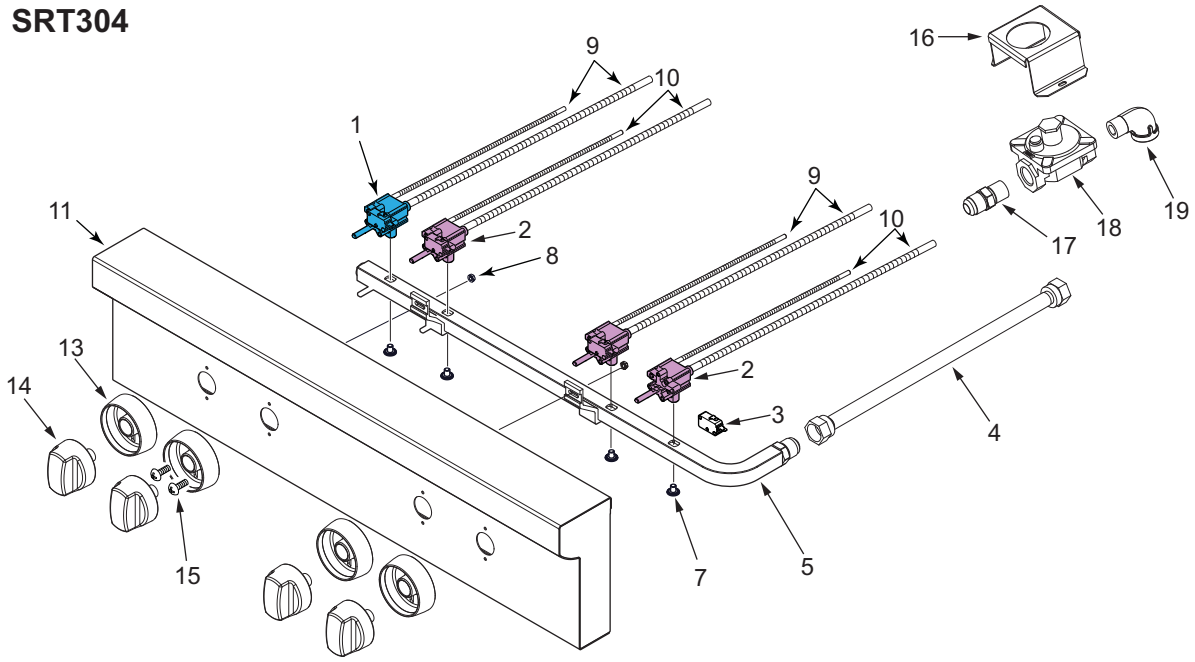
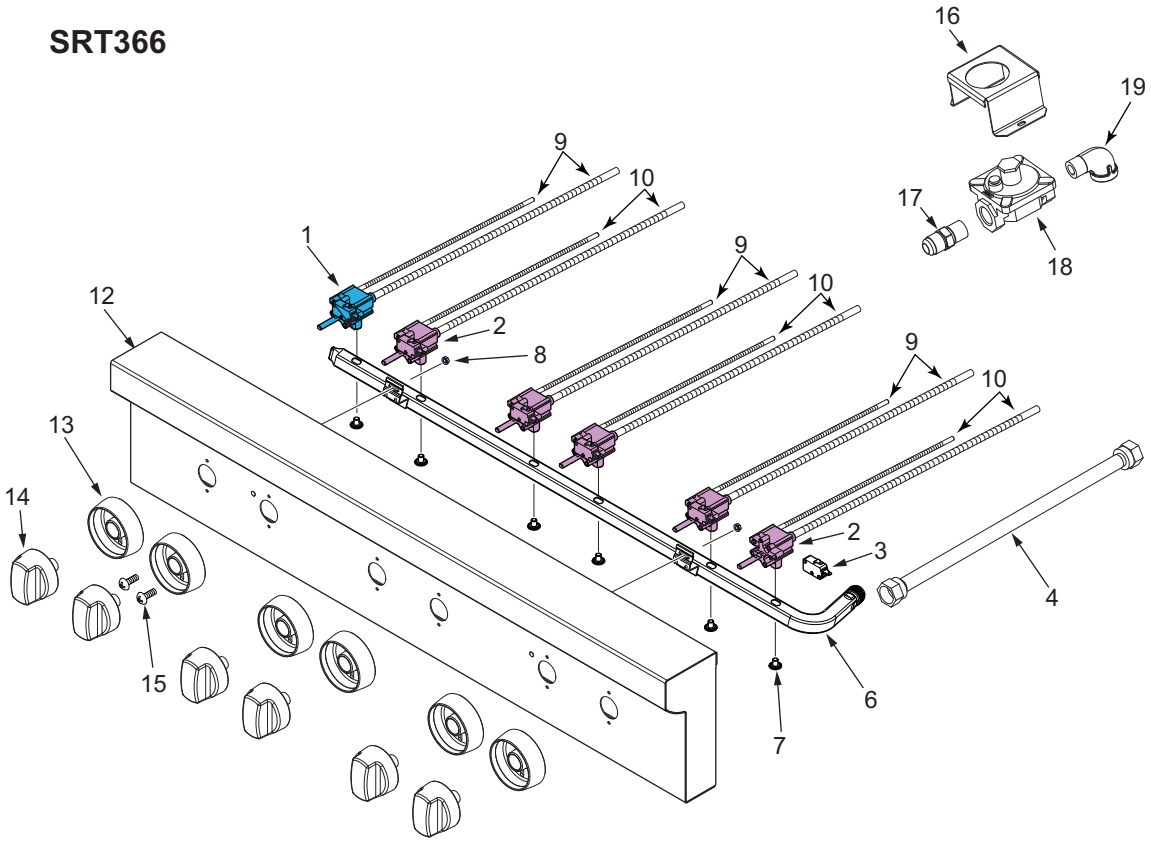
SRT366