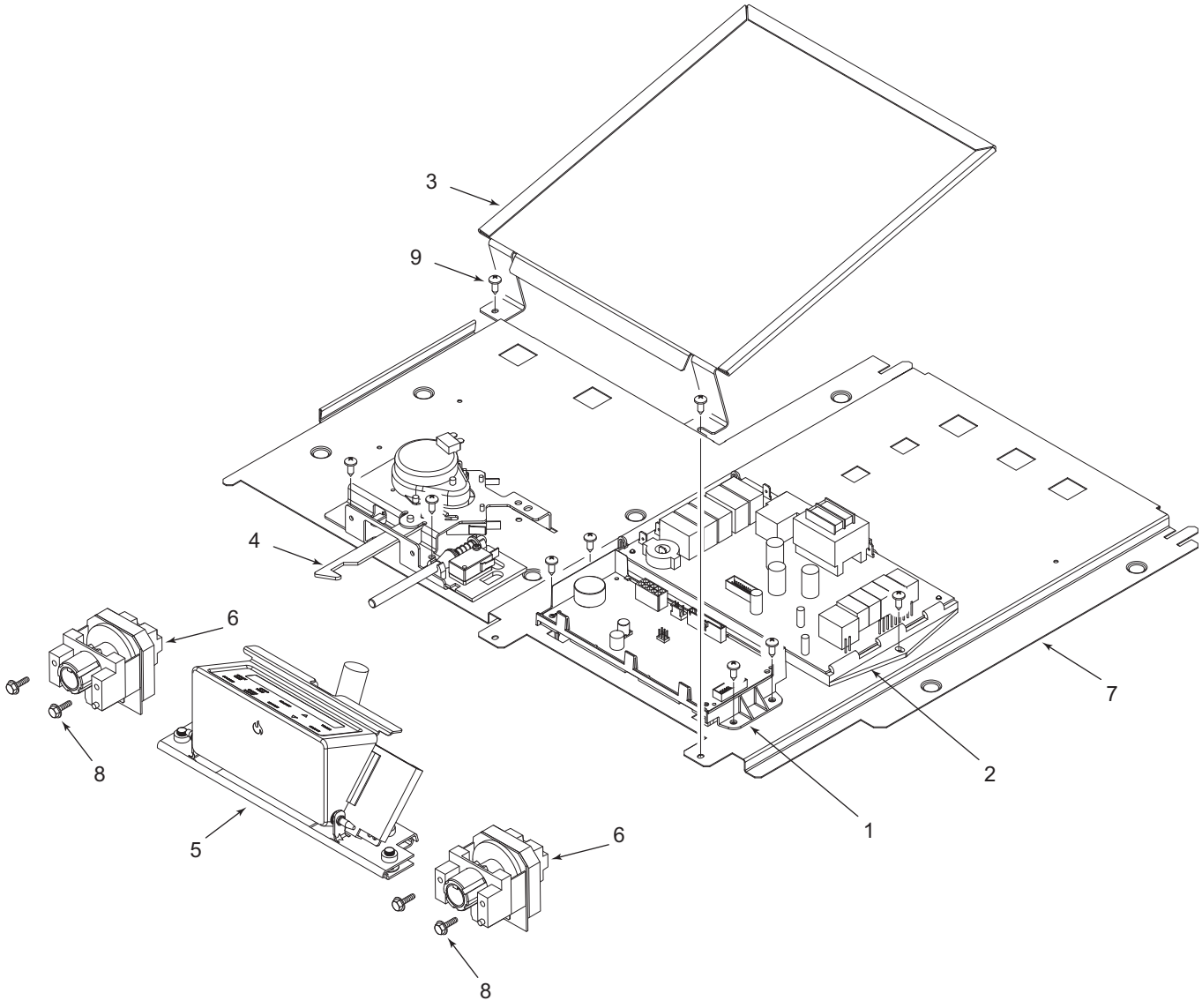IR304 & IR365 ELECTRONIC COMPONENTS VIEW