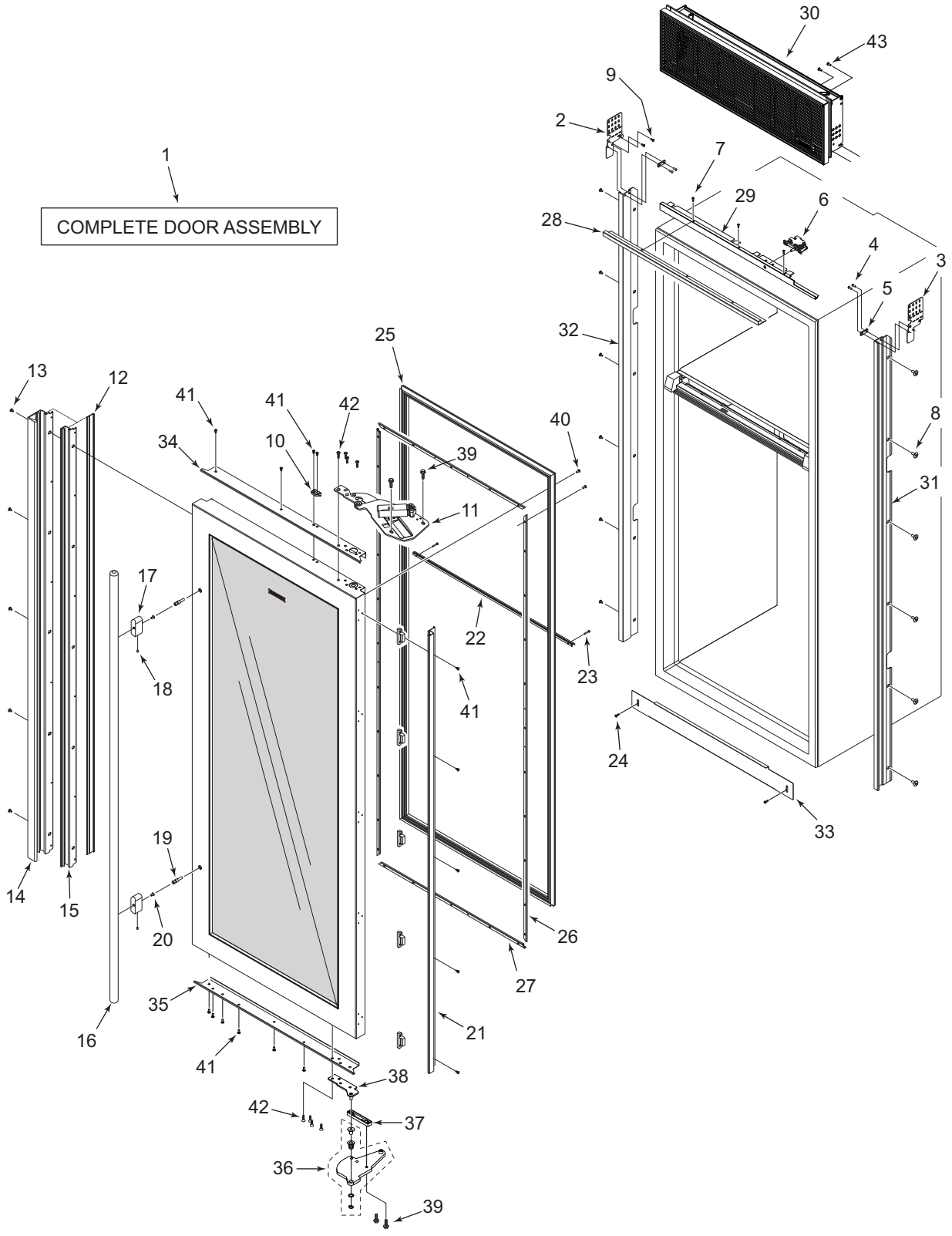BUILT-IN WINE STORAGE (BW-30) DOOR, GRILLE & TRIM VIEW