General Information

GENERAL INFORMATION

SERVICE MANUAL INTRODUCTION

This service manual helps with troubleshooting and diagnosing malfunctions, completion of repairs, and return of the product to proper operating condition. Read the complete instructions contained within before initiating any repairs.

This guide is intended for use by Factory Certified Service. Sub-Zero Group, Inc. recommends that only Factory Certified Service companies do repairs.

Warning and Caution product safety labels appear throughout this manual. Product safety labels appear at the beginning of some sections. Follow the instructions in the product safety labels to avoid personal injury and/or product damage. The sample safety labels explain the types of notices that appear in this manual.

⚠ WARNING

States a hazard that may cause serious injury or death if precautions are not followed.

⚠ CAUTION

Indicates minor injury or product damage may occur if precautions are not followed.

IMPORTANT NOTE: Highlights especially important information.

TIP: Indicates additional, useful information.

Information and images contained herein are copyright of Sub-Zero Group, Inc. Neither this manual nor any information or images contained herein may be copied or used in whole or in part without the express written consent of Sub-Zero Group, Inc. © Sub-Zero Group, Inc., all rights reserved.

SUB-ZERO PRODUCT RATING PLATE INFORMATION

The product rating plate is found on upper left-hand side wall of the compartment.

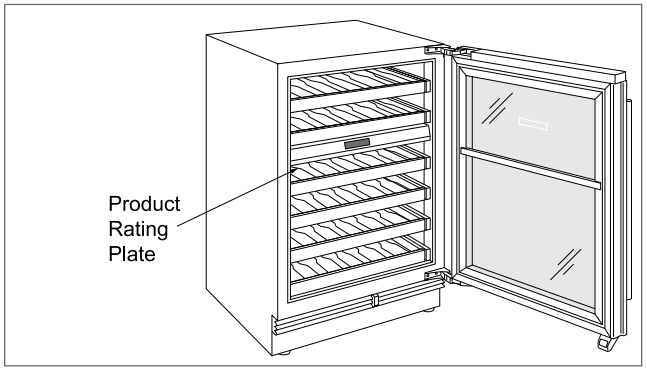

Important information for each product is listed on the product rating plate. Rating plates identify:

- Place of manufacture
- Model
- Serial number
- Refrigerant charges
- Total amp draw when operating
- Electrical information

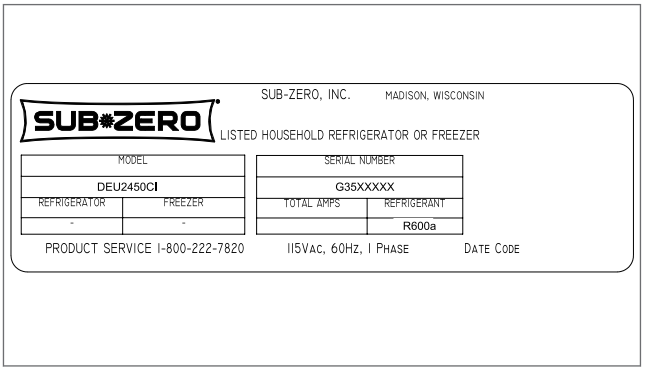

MODEL DESCRIPTIONS AND SALES ACCESSORIES

For more details on individual model descriptions and a listing of all compatible sales accessories, see the *Sub-Zero Product and Sales Accessory Reference Guide*.

DESIGNER UNDERCOUNTER MODEL KEY

Model Character	Description
DEU	Designer Undercounter
15″ or 24″	Width
50	Model differentiator
R	Refrigerator
B	Beverage Center
C	Combination Refrigerator and Freezer
W	Wine
G	Glass door
I	Ice maker
A	High altitude glass door
O	Outdoor use
/R	Right-hinge
/L	Left-hinge
ADA	Americans with Disabilities Act
ICB	International Designation

General Information

Product Use and Care and Installation Guides (continued)

PRODUCT USE AND CARE AND INSTALLATION GUIDES

Product use and care guides, installation guides, and other product specifications are available in the *Product Specifications and Manuals Library*.

UNIT WARRANTY

Product warranty is determined by the installation location and the date of installation.

- View product warranties at *https://www.subzero-wolf.com/warranty*.
- Warranties start on the day of product installation.
- Search for warranty and service information by serial number, customer last name, and address using Unit History at *http://service.subzero.com/Tools/UnitHistory*.

USER INTERFACE MODULE (UIM)

Input operations, including temperature regulation, user options, and settings. See possible issues and enter service functions for the electronic control system through the touch-sensitive UIM.

Boot-Up Screen

The Boot-Up screen appears when power is supplied to a unit.



As the loading process continues, the Boot-Up screen changes. The model number appears.



- The screen shown after the model is loaded depends on the mode before the loss of power.
  - If the unit was off, the Power screen appears.
  - If in normal mode, the Home screen appears.
  - If the unit is in Short Vacation Mode, the Short Vacation screen appears.
  - If the unit is in Long Vacation Mode, the Long Vacation screen appears.
  - If the unit is in Sabbath Mode, the Sabbath screen appears.

Power Screen

The Power screen appears after initial boot-up. To turn on the unit, touch and hold Power for 3 seconds.



Short Vacation Screen

The Short Vacation screen appears when power is applied or restored to a unit that was in the Short Vacation Mode. When Short Vacation Mode is exited, the Home screen appears.



Long Vacation Screen

The Long Vacation screen appears when power is applied or restored to a unit that was in the Long Vacation Mode. When Long Vacation Mode is exited, the Home screen appears.



Home Screen

After turning the unit on, the Home screen appears. Current zone temperature, the units of operation, and the Settings icon are shown on the Home screen.

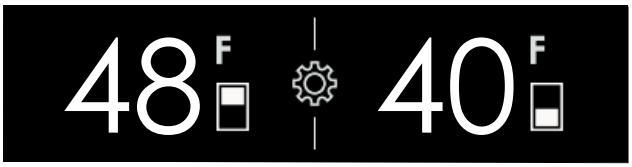

Temperature Setpoint Adjustment Screen

1 Tap a temperature reading on the Home screen to access the Temperature Setpoint Adjustment screen. The zone being adjusted is shown.

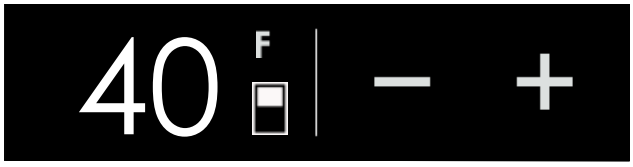



Controls and Operation

TEMPERATURE SETPOINT ADJUSTMENT SCREEN (continued)

2 Tap the + or - icon to adjust the temperature.
- The freezer temperature range is -5°F to 5°F (-21°C to -15°C).
- The refrigerator temperature range is 34°F to 42°F (1°C to 6°C).
- The wine zone temperature range is 40°F to 65°F (5°C to 18°C).

3 After adjustment, tap the temperature again or wait 10 seconds to return to the Home screen.

SETTINGS SCREEN

From the Home screen, tap the Settings icon. The Settings screen appears. Use the Settings screen to adjust various unit settings. The available Settings windows are shown by the dots at the top of the display.

- Use the arrows to scroll left or right on the Settings screen.
- The Return icon shows the prior screen.
- If an icon is grayed out, the feature is either not on or not available.



Lights Settings

1 Tap the Settings icon on the Home screen. The Settings screen appears.



2 Tap the Lights icon to access the Lights Settings screen.



TIP: If the model does not have accent lights, the zone on the left is blank.

3 Tap Accent to cycle the accent setting between Hi, Med, Lo, and Off.

4 Tap Soft On to cycle the soft on setting between 0 seconds, 2 seconds, and 4 seconds.

5 Tap the Return icon or wait 10 seconds to return to the Home screen.

Lights Disabled Screen

If the unit lights have been on extensively and are overheating, the lights are disabled. The Lights Briefly Disabled screen appears.



- The lights are disabled for 10 minutes.
- The lights come back on automatically.
- The major reason for the lights overheating is from the door being open.
- If the door is closing properly, check:

1 Gasket
2 Door switch
3 Control board

Door Alarm Settings

1 Tap the Settings icon on the Home screen. The Settings screen appears.



2 Tap the Alarm icon to turn the Door Alarm on or off.



3 Tap ALARM DELAY to set the door alarm delay between 5 seconds and 90 seconds, in 5 second increments. The delay is the amount of time the door can be open before the door alarm goes off.

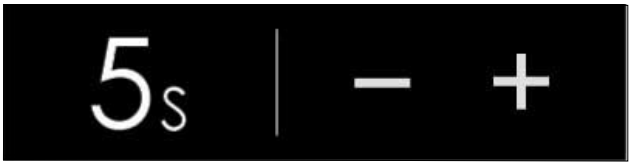

DOOR ALARM SETTINGS (continued)

4 Tap the Return icon or wait 10 seconds to return to the Home screen.

Snooze or Disable Alarm

1 If the door alarm is triggered, the Snooze or Disable Alarm screen appears.

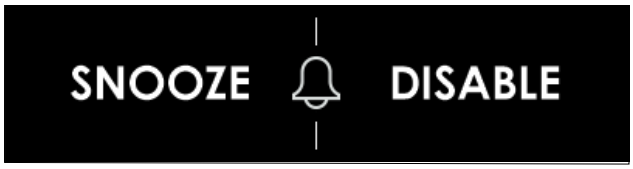

2 Tap Snooze to disable the door alarm until the door is closed. The Home screen appears.

3 Tap Disable, and the Disable Alarm screen appears.



- Tap No, and the Snooze or Disable Alarm screen appears.
- Tap Yes. The door alarm is turned off until it is manually turned back on. The Home screen appears.

Connected Settings

1 Tap the Settings icon on the Home screen. The Settings screen appears.

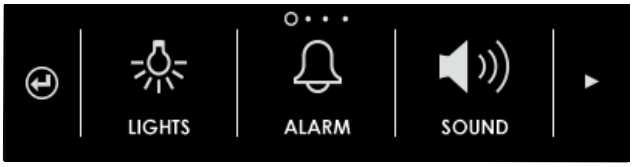

2 Tap the right arrow ▶ to move to the Connect icon.

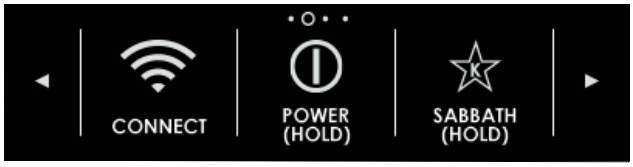

3 Tap the Connect icon to turn the Wi-Fi connection on or off.



4 Wait 10 seconds to return to the Home screen.

Connect a Device Screen

1 When the unit is prompted by a device, it shows a six-digit code in the PIN screen.

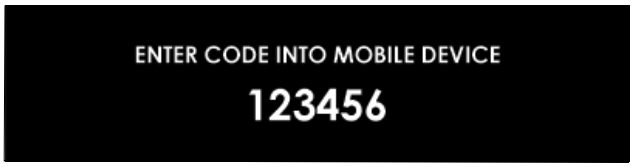

2 Enter the code into the device for Connected use.

Power Settings

1 Tap the Settings icon on the Home screen. The Settings screen appears.

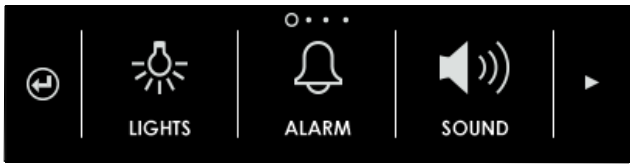

2 Tap the right arrow ▶ to move to the Power icon.

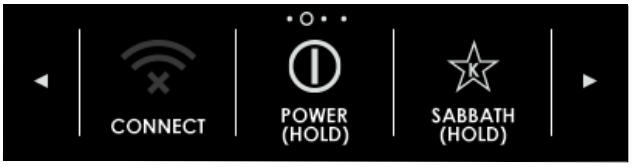

3 Touch and hold the Power icon for 3 seconds to turn the unit off.

To turn the unit on, see *Power screens*.

Sabbath Settings (continued)

Sabbath Settings

1 Tap the Settings icon ⚙ on the Home screen. The Settings screen appears.



2 Tap the right arrow ▶ to move to the Sabbath icon.



3 Touch and hold the Sabbath icon ☆ for 3 seconds to turn the Sabbath Mode on. The Sabbath Mode screen appears.



4 Touch and hold the Sabbath icon ☆ for 3 seconds to turn the Sabbath Mode off.

5 When Sabbath Mode is turned off, the Home screen appears.

Temperature Units Settings

1 Tap the Settings icon ⚙ on the Home screen. The Settings screen appears.

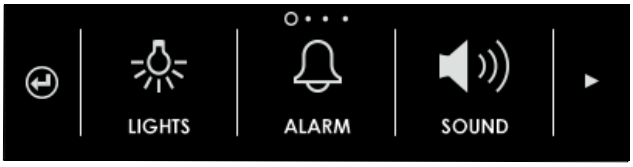

2 Tap the right arrow ▶ to move to the Temperature Units icon.

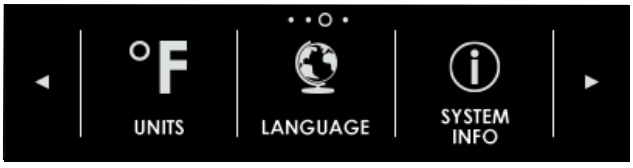

3 Tap the Temperature Units icon °F to switch between °F and °C.

4 Wait 10 seconds to return to the Home screen.

Language Screen

1 Tap the Settings icon ⚙ on the Home screen. The Settings screen appears.



2 Tap the right arrow ▶ to move to the Language icon.



3 Tap the Language icon. The language screen is shown.

- The available languages are English, Spanish, Italian, French, German, Dutch, and Chinese.

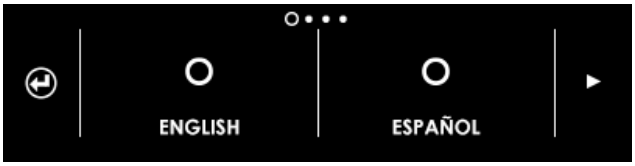

4 Tap the right arrow ▶ to move to the desired language.

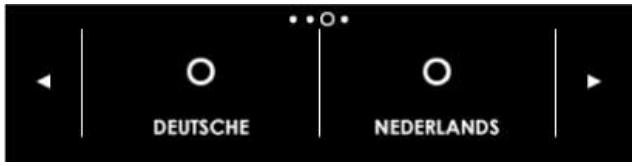

5 Tap the desired language. A dot will appear in the circle.

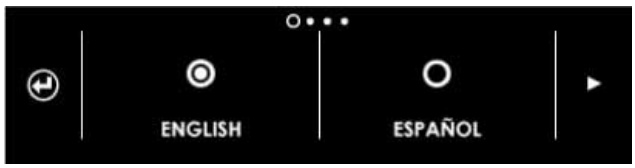

6 Tap the Return icon or wait 10 seconds to return to Settings.

Controls and Operation

Info Settings (continued)

Info Settings

1 Tap the Settings icon ⚙ on the Home screen. The Settings screen appears.



2 Tap the right arrow ▶ to move to the Info icon.



3 Tap the Info icon ⓘ. The UIM (user interface module), HLA (high-level application), and CCM (central control module) software versions are shown.



4 Tap the right arrow ▶. The Control software version, the Unit serial number, and UIM software version are shown. The UIM is repeated.

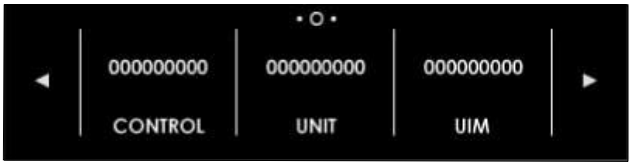

5 Tap the left arrow to return to the previous screen. Tap the right arrow ▶ to see the three most recent errors.

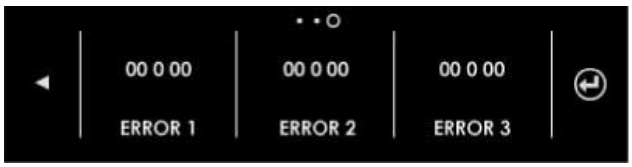

6 Tap the left arrow to return to the previous screen. Tap the Return icon ↵ to return to the Info screen. Or, wait 10 seconds to return to the Home screen.

Showroom Settings

1 Tap the Settings icon ⚙ on the Home screen. The Settings screen appears.



2 Tap the right arrow ▶ to move to the Service icon.

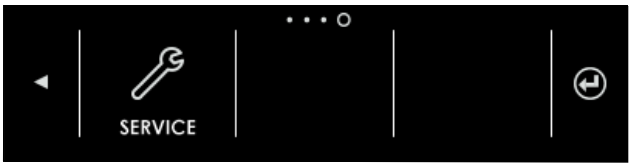

3 Tap the Service icon 🔧. The password screen appears.

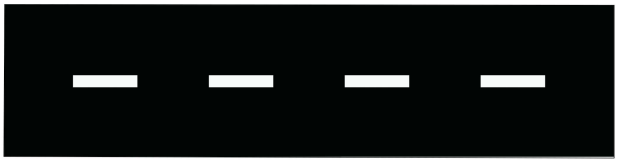

4 To enter Showroom Mode, tap each dash until the symbols for the password are shown.

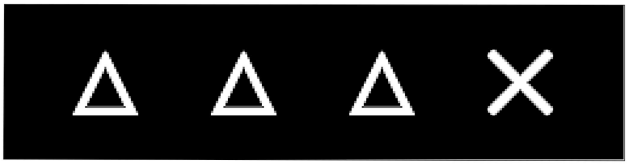

5 If the unit is not in the Showroom Mode, the Showroom On screen appears.



6 If the unit is in the Showroom Mode, the Showroom Off screen appears.



SHOWROOM SETTINGS (continued)

7 Tap Showroom On or Off. If turning Showroom Mode off, the standard Home screen appears. If turning Showroom Mode on, the Home screen with the Showroom symbol appears.



DIAGNOSTIC MODE

Diagnostic Mode is accessed through the user interface module (UIM). Entering the password on the Service Password screen allows access to the diagnostic options.

Diagnostic Tab	Function
FAULTS	Lists all error codes with the date and severity of the fault. Logs up to 256 faults. Provides the ability to clear the faults.
TEMP	Provides thermistor reading based on zone. Each reading provides the log number from 0 to 256. Indicates whether the unit was turned on or off and the cabinet, evaporator, condenser, and ambient temperature.
MODELS	Provides programming for all DEU models. When a model is selected, the programming is automatically updated.
MANUAL ACTIVATION	Turns on individual components based on component groups.
TEMP OFFSET	Offset the temperature by zone.
MANUAL DEFROST	Runs manual freezer defrost.

Diagnostic Mode

1 Tap the Settings icon on the Home screen. The Settings screen appears.



2 Tap the right arrow ▶ to move to the Service icon.

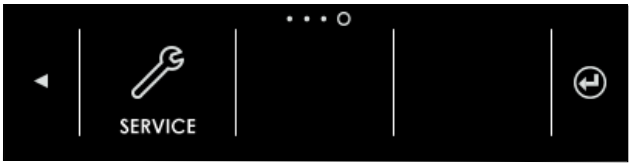

3 Tap the Service icon. The password screen appears.

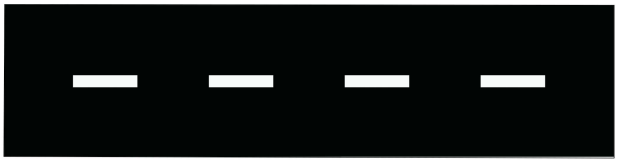

4 To enter Diagnostic Mode, tap each dash until the symbols for the password are shown.



5 Entering the password shows the Faults screen.

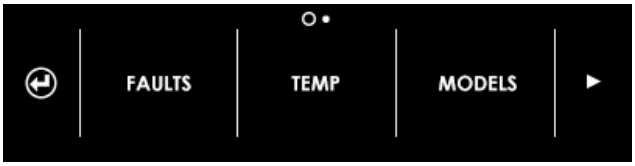

Faults

1 Enter Diagnostic Mode.

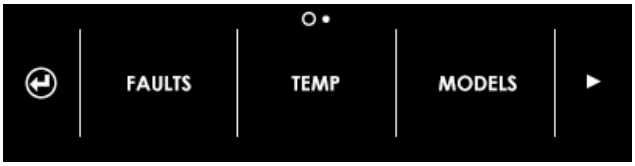

2 Tap Faults. The Clear Faults screen appears.



3 Touch and hold Clear Faults for 3 seconds to clear all faults.

4 Use the left or right arrow to scroll through the faults.

- The unit can log up to 256 faults.

Controls and Operation

FAULTS (continued)

5 Tap the fault number to see the Fault Information screen.

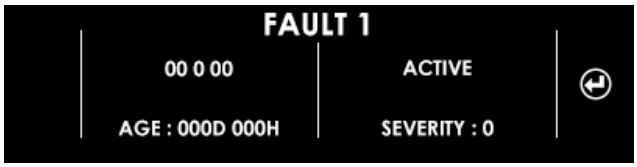

- The Fault Information screen shows:
  1. Fault number
  2. Error code
  3. If the error is active or inactive
  4. Time in days and hours
  5. Severity

6 Tap the Return icon to return to the Fault.

7 On the final Fault screen:

- Tap the Return icon to return to the Clear Faults screen.
- Tap the left arrow to scroll backwards through the fault codes.
- After 5 minutes of no activity, the unit exits Diagnostic Mode.

System Error

1 When a system error occurs, the System Error screen appears.



- The error code is shown.

2 Tap Snooze to bypass the System Error screen. The Home screen appears.

Temp

1 Enter Diagnostic Mode.

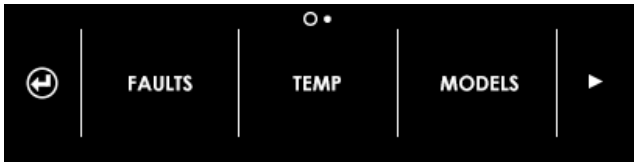

2 Tap Temp, and the Temp Zone screen appears.

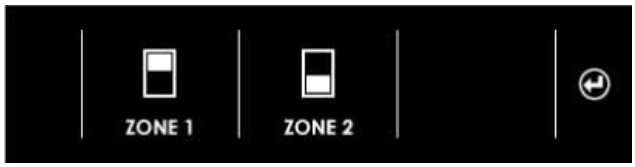

3 Tap Zone 1 or Zone 2. The current temperatures are shown.

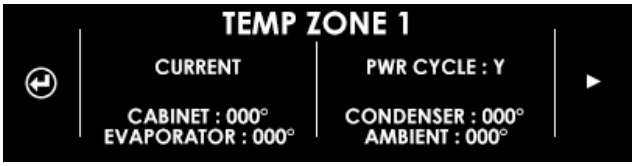

- Cabinet thermistor, evaporator thermistor, condenser thermistor, and ambient temperature are in degrees Fahrenheit.
- Has the power to the unit been cycled? Y is yes. N is no.

4 Tap the left or right arrow to scroll through the 256 stored thermistor readings.

- Tap the Return icon to return to the Temp Zone screen.

5 After 5 minutes of no activity, the unit exits Diagnostic Mode.

Models

1 Enter Diagnostic Mode.

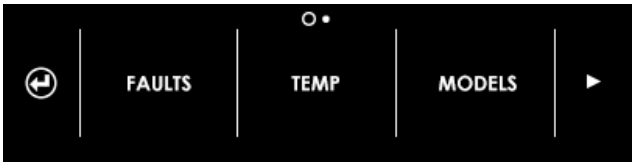

2 Tap Models, and the model list screen appears.



MODELS (continued)

3 Tap the left or right arrow to scroll through the model list.

MODEL NUMBER LIST	
Serial Tag Model	Model on Model List
DEU1550B, DEU1550BA	DEU1550B
DEU1550BG	DEU1550BG
DEU1550W, DEU1550WA	DEU1550WSZ
DEU2450BG	DEU2450BG
DEU2450BG/ADA	DEU2450BGADA
DEU2450CI	DEU2450C
DEU2450R	DEU2450R
DEU2450R/ADA	DEU2450RADA
DEU2450RO	DEU2450RO
DEU2450W, DEU2450WA	DEU2450WDZ
DEU2450W/ADA	DEU2450WSZADA
ICBDEU2450BG	ICBDEU2450BG
ICBDEU2450R	ICBDEU2450R
ICBDEU2450W	ICBDEU2450WDZ

4 Tap the model number to move to the Set Model screen.



5 Tap Yes, and the Programing screen appears.



6 After the programming is finished, the Set Model Complete screen appears.



- After the programming is finished, the Model Loading screen appears.
- After the model is loaded, the Home screen appears.

Manual Activate

1 Enter Diagnostic Mode.

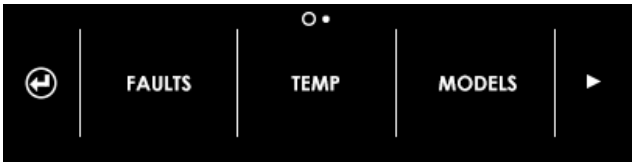

2 Tap the right arrow ▶ to move to the Manual Activate screen.



3 Tap Manual Activate, and the first manual activation screen appears.

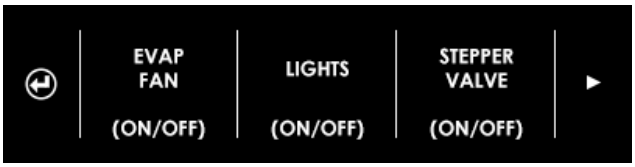

4 Tap the left or right arrow to scroll through the list of components available to be turned on.

5 The components that are available to be turned on depends on the DEU model. The evaporator fan is always first, as all models have an evaporator fan.

MANUAL ACTIVATION COMPONENTS		
UIM Name	Model	Component
Evap Fan	All	Energize the evaporator fan.
Lights	All	Turn on the lights.
Stepper Valve	DEU2450W	Turn on the refrigerant valve.
Water Enable	DEU2450CI	Turn on the water valve.
Comp Relay	All	Turn on the compressor.
Baffle	DEU2450CI	Open the air damper.
Condenser Fan	All	Turn on the condenser fan.
Ice Water	DEU2450CI	Turn on the ice maker.
Manual Defrost	DEU2450CI and DEU2450W	Turn on the defrost heater or Wine ambient heaters.

MANUAL ACTIVATE (continued)

6 Tap the component to move to the component activation screen.



7 Tap the right arrow. The next component is shown. If there is more than one of a component, that is shown first. For example: On the DEU2450CI, Evap Fan 1 is shown. When you tap the right arrow, Evap Fan 2 is shown. Tap the right arrow again and the Lights screen is shown.

8 Tap the component off or component on to turn the component on or off.



- A component runs for 5 minutes and then turns off.
- When a water valve is turned on, it is energized for 20 seconds.
- After 5 minutes of no activity, the unit exits Diagnostic Mode.

Manual Defrost

1 Enter Diagnostic Mode.

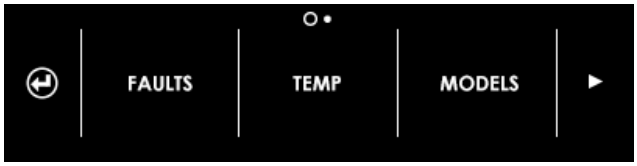

2 Tap the right arrow ▶ to move to the Manual Defrost screen.



⚠ CAUTION

The manual defrost on the Wine models, turns on the ambient heaters.

3 Tap Manual Defrost, the Start Manual Defrost screen appears.



- Tap No and the Manual Defrost screen appears.

4 Tap Yes, and the Defrosting screen appears.



- After 10 seconds, the unit returns to the Manual Defrost screen. The unit defrosts in the background.

Temp Offset

1 Enter Diagnostic Mode.

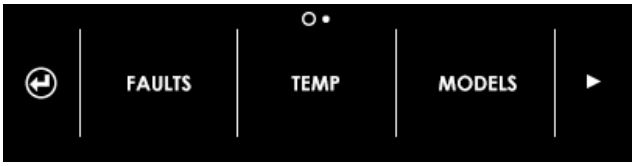

2 Tap the right arrow ▶ to move to the Temp Offset screen.



3 Tap Temp Offset, and the Zone screen appears.

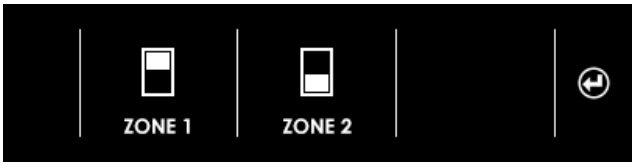

- Tap the Return icon ↵ to return to the Temp Offset screen.

Controls and Operation

TEMP OFFSET (continued)

4 Tap the Zone to offset the temperature in that zone.

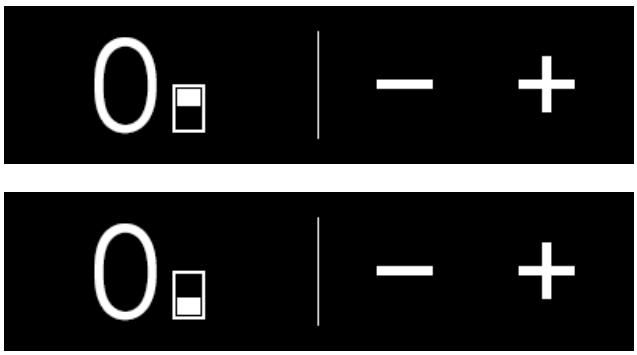

5 To offset the temperature in a zone, tap + or −. The temperature offset range is -5°F to +5°F (-3°C to +3°C).

6 Tap the zone again to set the temperature offset. The Zone screen appears.

Component Access and Removal

COMPONENT ACCESS AND REMOVAL

INSTALLATION AND REMOVAL

⚠ WARNING

Disconnect electrical power to any appliance covered in this manual before servicing. If electrical power is needed for component testing or diagnostics, disconnect electrical power immediately after testing or diagnostics are completed. Failure to do so could cause serious injury or death!

⚠ WARNING

If electrical power is supplied to the appliance, but the appliance is turned off, line voltage is still present at the main control board.

⚠ WARNING

The appliances this document covers contain R600a refrigerant in their sealed systems. R600a refrigerant is extremely flammable. Do not use a brazing torch or any hot work equipment when servicing the sealed system to avoid serious injury or death.

⚠ CAUTION

R600a refrigerant requires mineral oil in the compressor and does not tolerate contamination from other refrigerants, moisture, petroleum-based lubricants, silicone lubricants, cleaning compounds, rust inhibitors, leak detection dyes, or any other type of additive.

⚠ CAUTION

Metal edges may be sharp. Use caution when servicing unit to avoid personal injury.

UNIT REMOVAL

Uninstall the unit when directed by a procedure, or when access to a necessary component requires uninstalling the unit.

Uninstall the Unit

1 Turn off the power to the unit.

2 Remove the unit from the installation.

UNIT INSTALLATION

Install the Unit

1 Install the unit.

2 Turn on the power to the unit.

Exterior Components Removal and Installation

EXTERIOR COMPONENTS REMOVAL AND INSTALLATION

KICKPLATE REMOVAL

Remove the Kickplate

1 Remove the decorative kickplate if one is installed.

2 Use a Phillips screwdriver to remove the kickplate mounting screws.

3 Remove the kickplate from the unit.

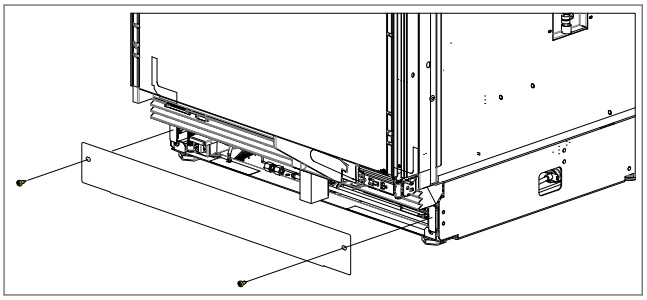

KICKPLATE INSTALLATION

Install the Kickplate

1 Place the kickplate at the bottom of the unit.

2 Use a Phillips screwdriver to install the kickplate mounting screws.

3 Install the decorative kickplate if one was removed.

GRILLE ASSEMBLY REMOVAL

⚠ WARNING

Disconnect the product from the power source before starting this procedure.

To remove the grille assembly, first remove:

1 *Kickplate*

Remove the Grille Assembly

1 Use a T-20 Torx bit to remove the grille assembly screws.

2 Pull the grille forward and disconnect the wire connectors from the door switch assembly.

3 Remove the grille assembly from the unit.

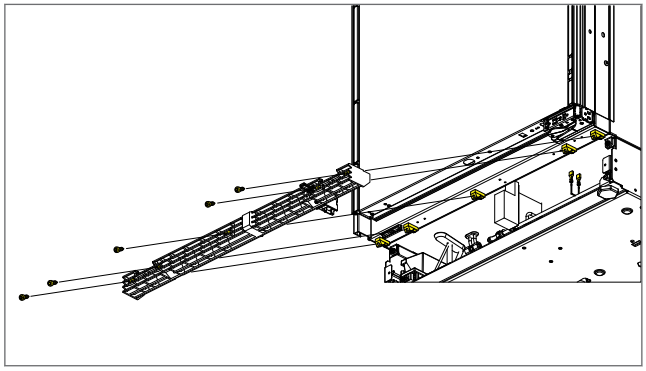

GRILLE ASSEMBLY INSTALLATION

After installing the grille assembly, install:

1 *Kickplate*

Install the Grille Assembly

1 Place the grille assembly at the bottom of the unit.

2 Connect the door switch assembly wire connectors to the door switch.

3 Use a T-20 Torx bit to install the grille assembly mounting screws.

SWITCH DEPRESSOR REMOVAL

Remove the Switch Depressor

1 Use a T-20 Torx bit to remove the switch depressor mounting screw.

2 Remove the switch depressor from the unit.

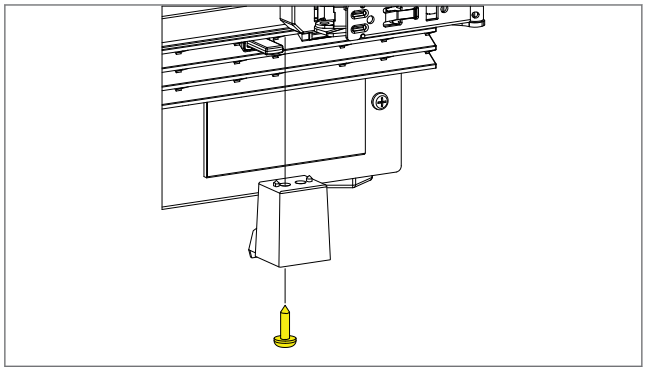

SWITCH DEPRESSOR INSTALLATION

Install the Switch Depressor

1 Place the switch depressor onto the bottom of the door.

2 Use a T-20 Torx bit to install the switch depressor mounting screw.

DOOR SWITCH ASSEMBLY REMOVAL

To remove the door switch assembly, first remove:

1 *Kickplate*
2 *Grille assembly*

Remove the Door Switch Assembly

1 Use a T-20 Torx bit to remove the door switch assembly mounting screw.

2 Remove the door switch assembly from the grille assembly.

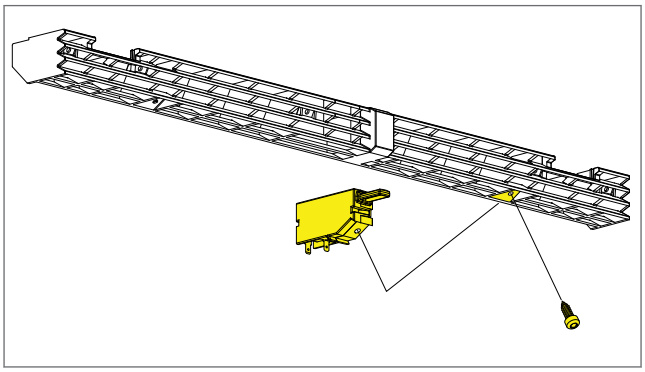

DOOR SWITCH ASSEMBLY INSTALLATION

After installing the door switch assembly, install:

1 *Grille assembly*
2 *Kickplate*

Install the Door Switch

1 Install the door switch assembly into the grille assembly.

2 Use a T-20 Torx bit to install the door switch assembly mounting screw.

DOOR GASKET REMOVAL

Remove the Door Gasket

Pull the gasket from the retaining channel.

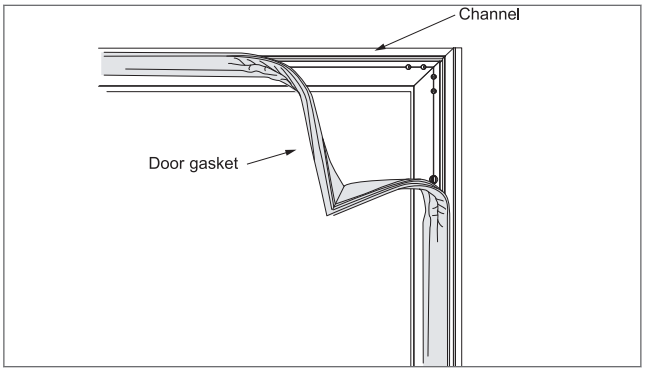

DOOR GASKET INSTALLATION

Install the Door or Drawer Gasket

1 Starting at a corner, insert the gasket dart into the retaining channel.

2 Close the door or drawer and verify the gasket seals correctly.

CENTER DOOR SEAL REMOVAL

Remove the Center Door Seal

1 Open the door.

2 Lift one side of the center door seal and pull the center door seal from the door seal retainer.

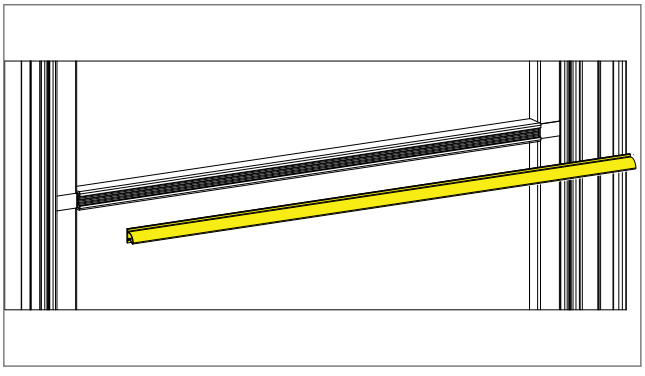

CENTER DOOR SEAL INSTALLATION

Install the Center Door Seal (continued)

Install the Center Door Seal

1 Install the center door seal into the door seal retainer.

2 Close the door.

UIM TRIM ASSEMBLY REMOVAL

Remove the UIM Trim Assembly

1 Push the UIM trim assembly toward the rear of the unit.

2 While holding the UIM trim assembly toward the rear of the unit, rotate the front of the UIM trim assembly up.

3 Remove the UIM trim assembly from the door.

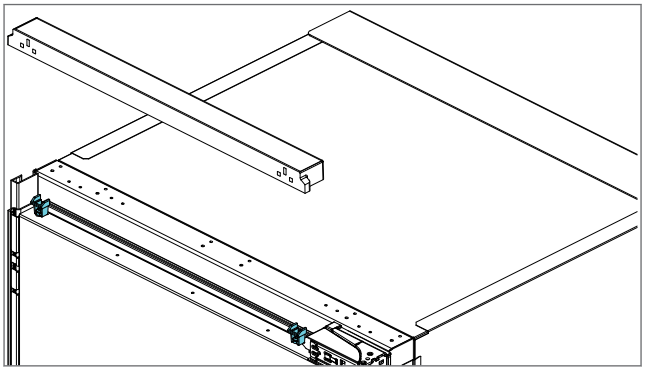

UIM TRIM ASSEMBLY INSTALLATION

Install the UIM Trim Assembly

1 Place the UIM trim assembly onto the control mount retainers. The front of the UIM trim assembly is higher than the back.

2 Rotate the UIM trim assembly down onto the control mount retainers.

WINE DOOR ASSEMBLY REMOVAL

To remove the door assembly, first remove:

- *UIM trim assembly*

Remove the Door Assembly

TIP: The removal of a glass door or a solid door is the same.

1 Open the door.

2 Remove the cabinet hinge covers.

3 Use a T-25 Torx bit to loosen the cabinet hinge bolts.

4 Move the door toward the hinge side of the unit, moving the inner cabinet hinge bolts into the keyholes.

5 Pull the hinge side of the door away from the unit. Remove the door from the unit.

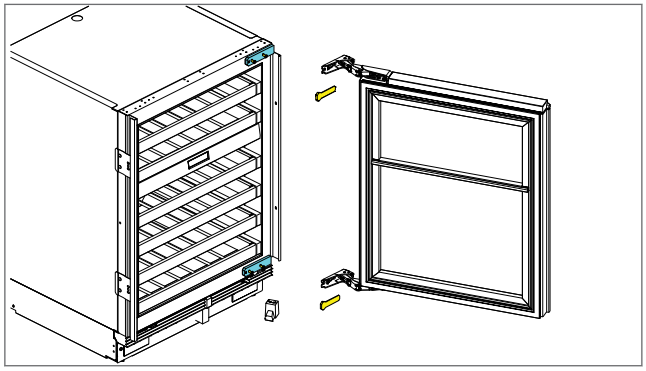

DEU2450W Shown

WINE DOOR ASSEMBLY INSTALLATION

After installing the wine door assembly, install:

- *UIM trim assembly*

Install the Door Assembly

1 Place the upper and lower door hinge keyholes over the door hinge cabinet bolts.

2 Slide the upper and lower door hinge open slots under the door hinge cabinet bolts.

3 Use a T-25 Torx bit to tighten the cabinet hinge bolts.

4 Install the cabinet hinge covers.

HINGE REMOVAL

To remove a hinge, first remove:

1 *Door assembly*

Remove the Hinge

1 Remove the hinge cover.

2 Use a T-25 Torx bit to remove the hinge mounting screws.

Exterior Components Removal and Installation

REMOVE THE HINGE (continued)

3 Remove the hinge from the door.

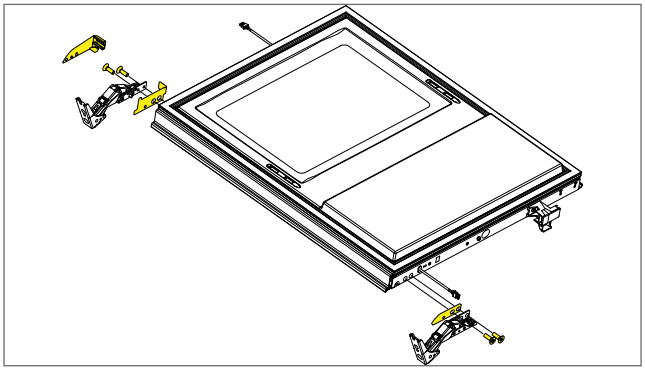

5 Remove the back cover from the unit.

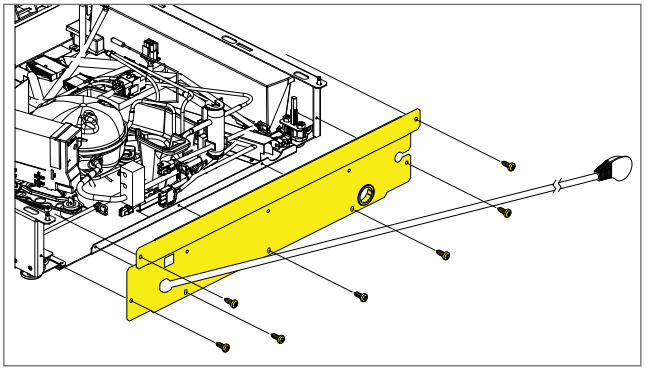

HINGE INSTALLATION

After installing the hinge, install:

1 *Door assembly*

Install the Hinge

1 Place the hinge onto the door.

2 Use a T-25 Torx bit to install the hinge mounting screws.

3 Install the hinge cover.

BACK COVER REMOVAL

To remove the back cover, first:

1 *Uninstall the unit*

Remove the Back Cover

1 Use a T-20 Torx bit to remove the back cover mounting screws.

2 Pull the back cover away from the unit.

3 Use a T-20 Torx bit to remove the screw from the ground wire.

4 Disconnect the power cord wire harness from the AC wire harness.

BACK COVER INSTALLATION

After installing the back cover:

1 *Install the unit*

Install the Back Cover

1 Connect the power cord wire harness to the AC wire harness.

2 Use a T-20 Torx bit to install the screw into the ground wire.

3 Place the back cover onto the unit.

4 Use a T-20 Torx bit to install the back cover mounting screws.

Wine Component Removal and Installation

WINE COMPONENT REMOVAL AND INSTALLATION

WINE RACK REMOVAL

Remove the Wine Rack

TIP: The removal of the upper and lower wine racks is the same.

1. Pull the wine rack forward.
2. Lift the front of the wine rack. Then pull the wine rack forward.
3. Remove the wine rack from the unit.

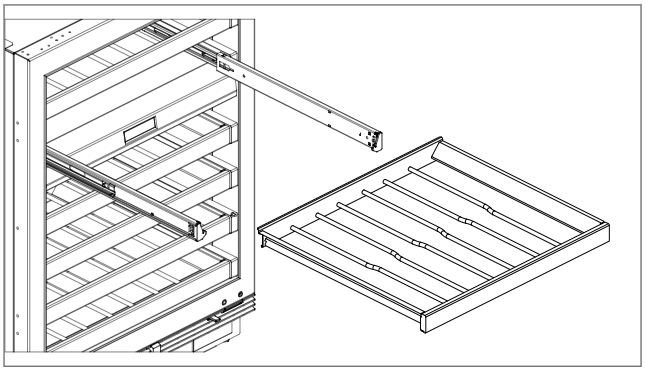

DEU2450W Shown

WINE RACK INSTALLATION

Install the Wine Rack

1. Extend the rack slides completely.
2. Angle one side of the wine rack down.
3. Place the lower side of the wine rack over the drawer slide.
4. Lower the other side of the wine rack.
5. Pull the drawer slide to the outside of the wine rack, then slide the drawer slide into the wine rack.
6. Push the wine rack backward and pull it forward to confirm it is correctly seated.

RACK SLIDE ASSEMBLY REMOVAL

To remove the rack slide assembly, first remove:

1 *Wine rack*

Remove the Rack Slide Assembly

1. Use a T-15 Torx bit to remove the rack slide assembly mounting screws.

   TIP: On the hinge side of the unit, remove the spacer from the unit.
2. Pull the rack slide assembly from the unit.

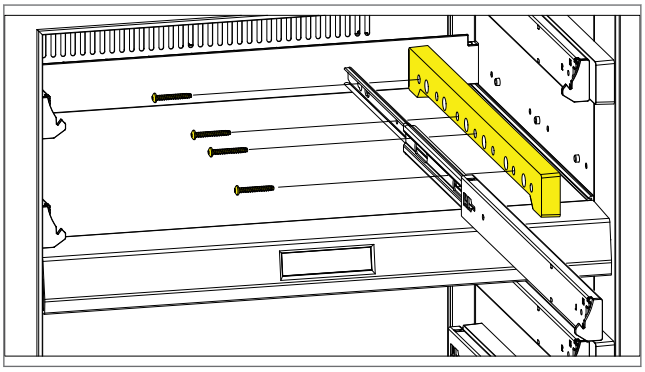

DEU2450W Shown

RACK SLIDE ASSEMBLY INSTALLATION

After installing the rack slide assembly, install:

1 *Wine rack*

Install the Rack Slide Assembly

1. Place the rack slide assembly on the side wall.
2. On the hinge side of the unit, place the spacer between the side wall and the rack slide assembly.
3. Use a T-15 Torx bit to install screws into the rack slide assembly.

LIGHT TUBE REMOVAL

⚠ WARNING

Disconnect the product from the power source before starting this procedure.

To remove the Wine light tube, first remove:

1 *Wine rack*

Remove the Light Tube

TIP: The removal of the light tube is the same for each section in the model.

REMOVE THE LIGHT TUBE (continued)

1 Slide a small flat-blade screwdriver behind the light tube on the right-hand side. Pry the light tube down, out of the mullion channel.

2 Disconnect the light tube wire connector.

3 Remove the light tube from the unit.

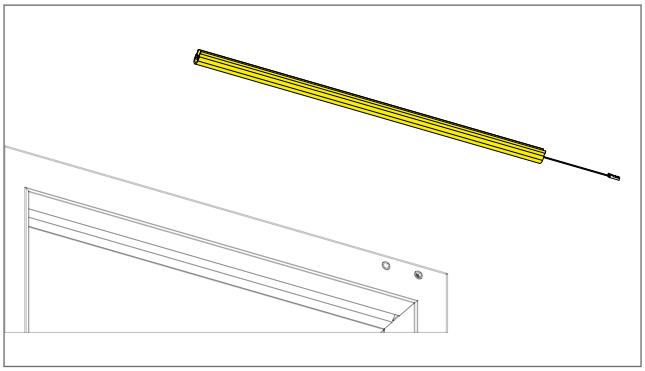

LIGHT TUBE INSTALLATION

After installing the Wine light tube, install:

1 *Wine rack*

Install the Light Tube

1 Connect the light tube wire connector.

2 The light wire connector comes out of the light tube on the right-hand side. Loop the light connector back toward the left, and connect it to the unit wire harness. Press the wire connector and wire harness into the top of the light tube. The connector should be inside the light tube, and the wire harness should be coming out of the light tube on the left-hand side.

3 Press the light tube into place.

USER INTERFACE MODULE (UIM) REMOVAL

⚠ WARNING

Disconnect the product from the power source before starting this procedure.

Remove the User Interface Module (UIM)

1 Use a T-15 Torx bit to remove the UIM mounting screws.

2 Pull the UIM forward from the mullion.

3 Disconnect the UIM wire harness from the mullion.

4 Remove the UIM from the unit.

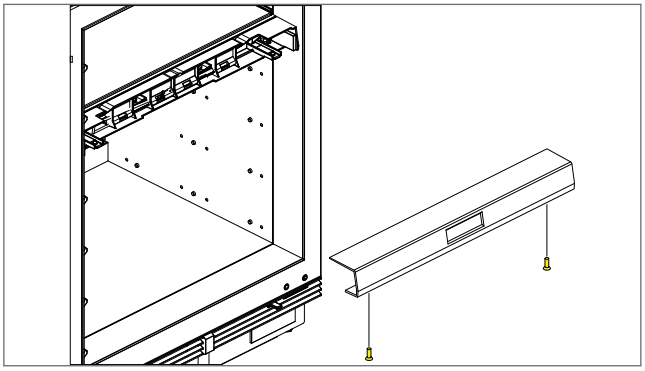

DEU Model Shown

USER INTERFACE MODULE (UIM) INSTALLATION

Install the User Interface Module (UIM)

1 Connect the UIM wire harness to the mullion.

2 Place the UIM onto the mullion.

3 Use a T-15 Torx bit to install the UIM mounting screws.

EVAPORATOR FAN ASSEMBLY REMOVAL

⚠ WARNING

Disconnect the product from the power source before starting this procedure.

To remove the upper wine fan assembly, first remove:

1 *Wine rack*
2 *Upper wine air duct*
3 *Upper wine fan cover*

Remove the Upper Wine Evaporator Fan Assembly

1 Use a T-20 Torx bit to remove the evaporator fan mounting screws.

2 Disconnect the evaporator fan assembly wire harness.

Wine Component Removal and Installation

REMOVE THE UPPER WINE EVAPORATOR FAN ASSEMBLY (continued)

3 Remove the evaporator fan from the unit.

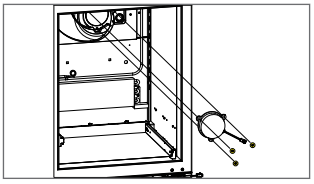
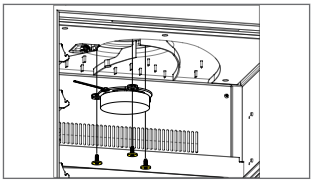

EVAPORATOR FAN ASSEMBLY INSTALLATION

After installing the upper wine fan assembly, install:

1 *Upper wine fan cover*
2 *Upper wine air duct*
3 *Wine rack*

Install the Evaporator Fan Assembly

1 Install the evaporator fan into the unit.
2 Use a T-20 Torx bit to install the evaporator fan mounting screws.
3 Connect the evaporator fan assembly wire harness.
4 Press the fan diffuser into place.

UPPER WINE AIR DUCT REMOVAL

To remove the upper wine air duct, first remove:

1 *Wine rack*

Remove the Upper Wine Air Duct

1 Use a T-20 Torx bit to remove the upper wine air duct mounting screws.
2 Pull the upper wine air duct forward.
3 Remove the upper wine air duct from the unit.

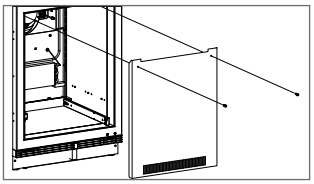
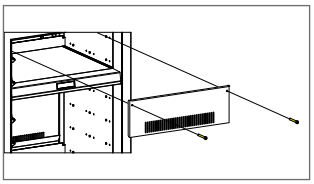

UPPER WINE AIR DUCT INSTALLATION

After installing the upper wine air duct, install:

1 *Wine rack*

Install the Upper Wine Air Duct

1 Place the upper wine air duct into the unit. The bottom of the upper wine air duct fits into the two tabs of the drain trough.
2 Align the screw holes at the top of the upper wine air duct.
3 Use a T-20 Torx bit to install the upper wine air duct mounting screws.

MULLION ASSEMBLY REMOVAL

⚠ WARNING

Disconnect the product from the power source before starting this procedure.

To remove the mullion assembly, first remove:

1 *Wine rack*

Remove the Mullion Assembly

1 Use a T-20 Torx bit to remove the mullion assembly mounting screws from beneath the mullion assembly.
2 Pull the mullion assembly forward.
3 Disconnect the fan and UIM wire harness at the back side of the mullion assembly.
4 Pull the mullion assembly forward out of the unit.

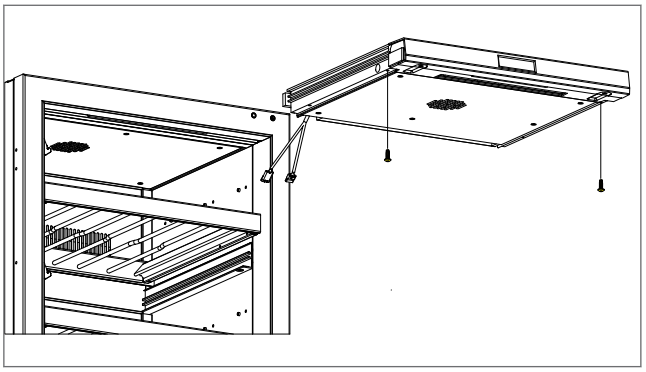

Wine Component Removal and Installation

Mullion Assembly Installation (continued)

MULLION ASSEMBLY INSTALLATION

After installing the mullion assembly, install:

1 *Wine rack*

Install the Mullion Assembly

1 Place the mullion assembly on to the cabinet supports.

2 Connect the fan and UIM wire harness, and insert the wire harness behind the air duct.

3 Push the mullion assembly to the back wall.

4 Use a T-20 Torx bit to install the mullion assembly mounting screws.

UPPER WINE FAN COVER REMOVAL

To remove the upper wine fan cover, first remove:

1 *Wine rack*
2 *Upper wine air duct*

Remove the Upper Wine Fan Cover

1 Use a T-15 Torx bit to remove the upper wine fan cover screws.

2 Remove the upper wine fan cover from the unit.

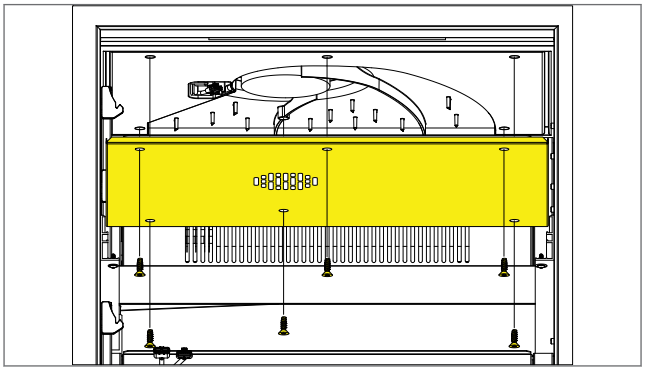

UPPER WINE FAN COVER INSTALLATION

After installing the upper wine fan cover, install:

1 *Upper wine air duct*
2 *Wine rack*

Install the Upper Wine Fan Cover

1 Place the upper wine fan cover into the unit.

2 Use a T-15 Torx bit to install the upper wine fan cover screws.

LOWER WINE FAN COVER REMOVAL

To remove the lower wine fan cover, first remove:

1 *Wine rack*
2 *Mullion assembly*

Remove the Lower Wine Fan Cover

1 Use a T-15 Torx bit to remove the lower wine fan cover screws.

2 Lift the lower wine fan cover from the mullion assembly.

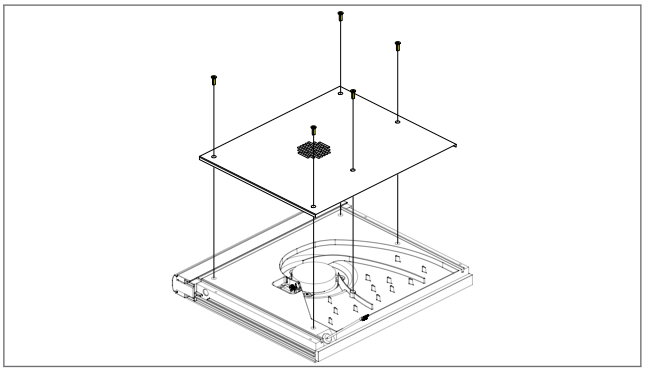

LOWER WINE FAN COVER INSTALLATION

After installing the lower wine fan cover, install:

1 *Mullion assembly*
2 *Wine rack*

Install the Lower Wine Fan Cover

1 Place the lower wine fan cover on to the mullion assembly.

2 Use a T-15 Torx bit to install the lower wine fan cover screws.

LOWER WINE AIR DUCT REMOVAL

To remove the lower wine air duct, first remove:

1 *Wine rack*

Wine Component Removal and Installation

Remove the Lower Wine Air Duct (continued)

Remove the Lower Wine Air Duct

1 Use a T-20 Torx bit to remove the lower wine air duct mounting screws.

2 Pull the lower wine air duct forward.

3 Remove the lower wine air duct from the unit.

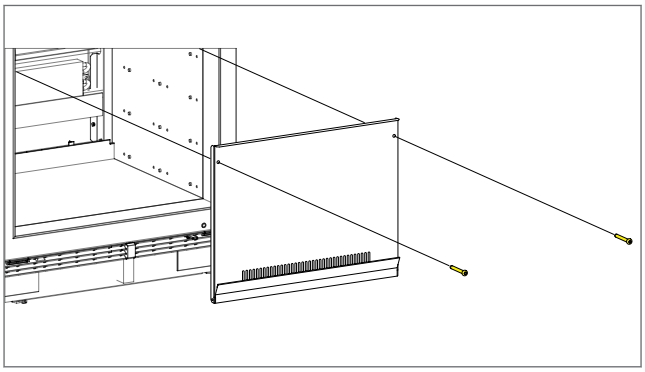

LOWER WINE AIR DUCT INSTALLATION

After installing the lower wine air duct, install:

1 *Wine rack*

Install the Lower Wine Air Duct

1 Place the lower wine air duct into the unit.

2 Align the screw holes at the top of the lower wine air duct.

3 Use a T-20 Torx bit to install the lower wine air duct mounting screws.

WINE COMPARTMENT THERMISTOR REMOVAL

⚠ WARNING

Disconnect the product from the power source before starting this procedure.

TIP: The removal of the wine compartment thermistor is the same for the upper and lower wine sections. The compartment thermistors are found in the evaporator fan shroud near the evaporator fan connection.

To remove the upper wine compartment thermistor, first remove:

1 *Wine rack*
2 *Upper wine air duct*
3 *Upper wine fan cover*

To remove the lower wine compartment thermistor, first remove:

1 *Wine rack*
2 *Mullion assembly*
3 *Lower wine fan cover*

Remove the Wine Compartment Thermistor

1 Cut the thermistor wire harness 1" (2.5 cm) from the head of the compartment thermistor.

2 Remove the wine compartment thermistor from the zone.

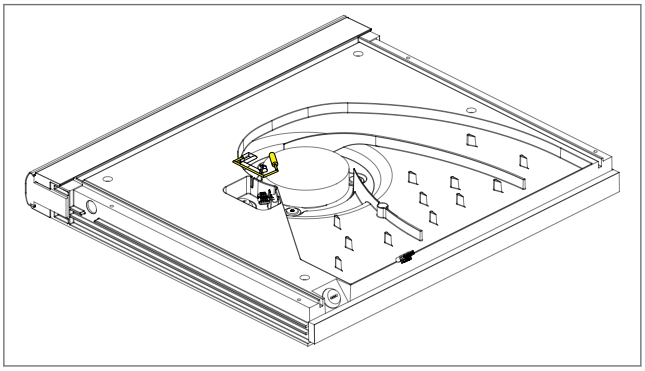

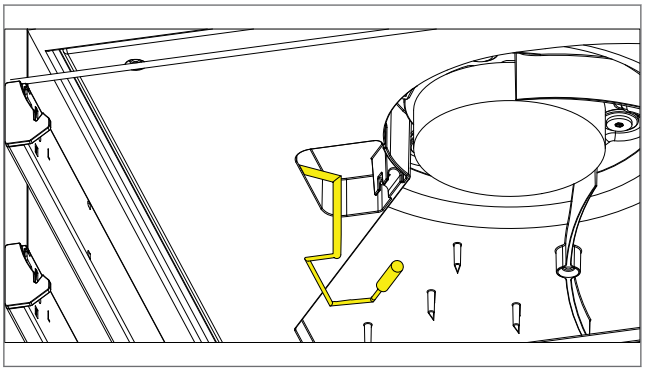

WINE COMPARTMENT THERMISTOR INSTALLATION

After installing the upper wine cabinet thermistor, install:

1 *Upper wine fan cover*
2 *Upper wine air duct*
3 *Wine rack*

After installing the lower wine cabinet thermistor, install:

1 *Lower wine fan cover*
2 *Mullion assembly*
3 *Wine rack*

Wine Component Removal and Installation

Install the Compartment Thermistor (continued)

Install the Compartment Thermistor

1 Cut the new thermistor wire harness 10" to 12" (25 cm to 30 cm) from the head of the thermistor.

2 Strip the wire insulation approximately 1/4" (6 mm) from the ends of the wires.

3 Place the ends of the wire leads into the preinsulated sealed splice.

4 Crimp the splice at the middle.

5 Use a heat gun on the low setting to heat the splice so that the tubing shrinks around the wires.

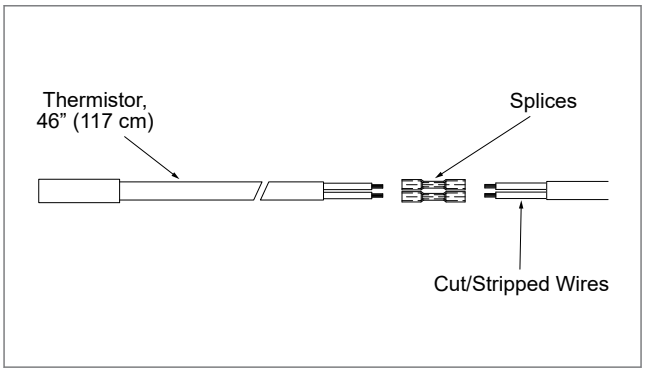

EVAPORATOR THERMISTOR REMOVAL

⚠ WARNING

Disconnect the product from the power source before starting this procedure.

To remove the upper evaporator thermistor, first remove:

1 *Wine rack*
2 *Upper wine air duct*

To remove the lower evaporator thermistor, first remove:

1 *Wine rack*
2 *Lower wine fan cover*

Remove the Evaporator Thermistor

IMPORTANT NOTE: Note the placement of the evaporator thermistor in the evaporator before removing it.

1 Pull the evaporator thermistor from the evaporator.

2 Cut the thermistor wire harness 8" (20 cm) from the head of the evaporator thermistor.

3 Remove the evaporator thermistor from the unit.

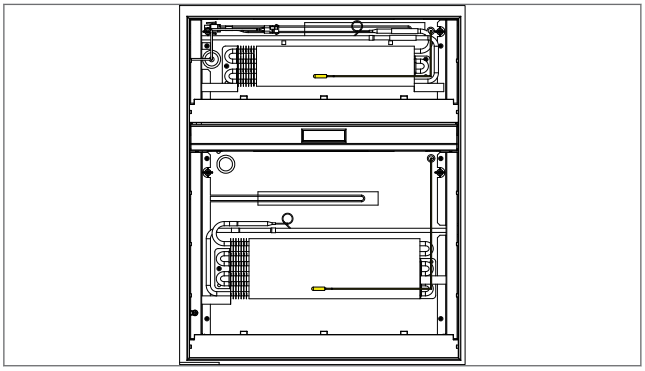

DEU2450W Shown

EVAPORATOR THERMISTOR INSTALLATION

After installing the upper evaporator thermistor, install:

1 *Upper wine air duct*
2 *Wine rack*

After installing the lower evaporator thermistor, install:

1 *Lower wine fan cover*
2 *Wine rack*

Install the Evaporator Thermistor

1 Strip the wire insulation approximately 1/4" (6 mm) from the ends of the wires.

2 Place the ends of the wire leads into the preinsulated sealed splice.

3 Crimp the splice at the middle.

4 Use a heat gun on the low setting to heat the splice so that the tubing shrinks around the wires.

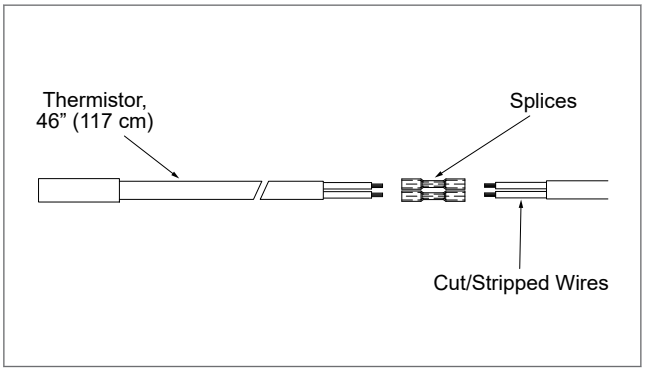

Wine Component Removal and Installation

Ambient Heater Removal (continued)

AMBIENT HEATER REMOVAL

⚠ WARNING

Disconnect the product from the power source before starting this procedure.

To remove the ambient heater in the upper wine section, first remove:

1 *Wine rack*
2 *Upper wine air duct*

To remove the ambient heater in the lower wine section, first remove:

1 *Wine rack*
2 *Lower wine air duct*

Remove the Ambient Heater

The ambient heater is:
- 12 VDC
- Twenty Watts
- Approximately 645 ohms
- The minimum off time is 180 seconds.
- The maximum on time is 1800 seconds.
- The ambient heater energizes when all of the following conditions are met:
  - The minim heater off time has expired.
  - The zone is in an idle state (not cooling).
  - The cabinet thermistor is not faulted out.
  - The cabinet temperature is less than or equal to the zone cooling temperature minus the heater cut in value.

TIP: The removal of the upper and lower wine section ambient heater is the same.

1 Disconnect the ambient heater wire harness from the low voltage wire harness.

2 Peel the foil of the ambient heater from the liner.

3 Remove the ambient heater from the unit.

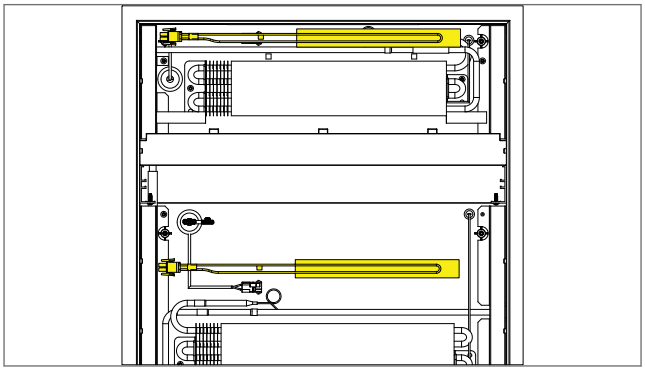

AMBIENT HEATER INSTALLATION

After installing the ambient heater in the upper wine section, install:

1 *Upper wine air duct*
2 *Wine rack*

After installing the ambient heater in the lower wine section, install:

1 *Lower wine air duct*
2 *Wine rack*

Install the Ambient Heater

1 Peel the protective cover from the back of the ambient heater.

2 Stick the ambient heater onto the liner in the same location as the original ambient heater.

3 Connect the ambient heater wire harness to the low voltage wire harness.

Unit Tray Component Removal and Installation

UNIT TRAY COMPONENT REMOVAL AND INSTALLATION

CONTROL BOARD OR DC POWER BOARD REMOVAL

⚠ WARNING

Disconnect the product from the power source before starting this procedure.

To remove the control board or DC power board, first remove:

1 *Kickplate*
2 *Grille assembly*

Remove the Control Board or DC Power Supply

1 Pull the center post up from the plastic rivet, then remove the plastic rivet.

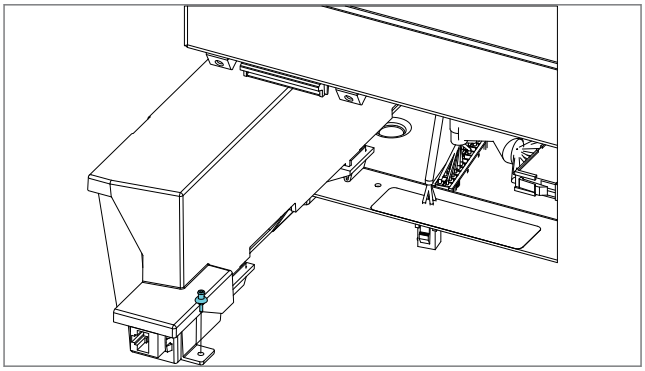

2 Move the control housing assembly to the right past the front bracket, then pull the control housing assembly from the unit.

3 Lay the control housing assembly flat, then disengage the control housing assembly tabs.

4 Separate the control housing assembly.

5 Disconnect the wire connectors from the control board and DC power supply.

6 Use a T-10 Torx bit to remove the screws from the control board or the DC power supply.

7 Remove the control board or DC power supply from the control housing assembly.

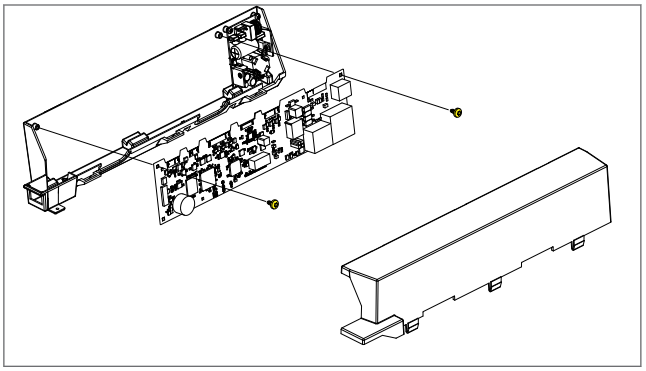

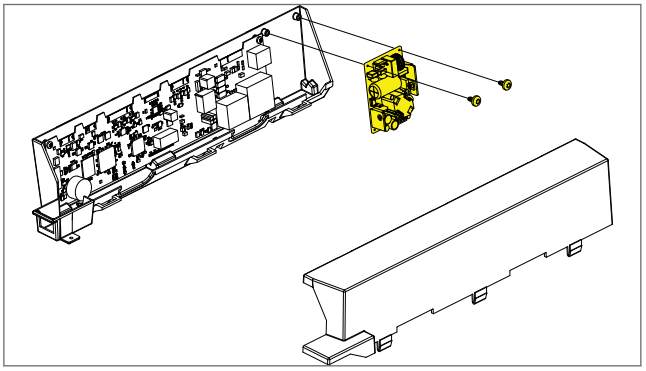

CONTROL BOARD OR DC POWER BOARD INSTALLATION

After installing the control board or DC power supply, install:

1 *Grille assembly*
2 *Kickplate*

Install the Control Board or DC Power Supply

1 Place the control board or DC power supply into the control housing assembly.

2 Use a T-10 Torx bit to install the screws into the control board or DC power supply.

3 Connect the wire connectors to the control board and DC power supply.

4 Assemble the control housing assembly.

5 Insert the control housing assembly into the unit.

6 Insert the plastic rivet in the control housing, then press the center post down.

Unit Tray Component Removal and Installation

Condenser Thermistor Removal (continued)

CONDENSER THERMISTOR REMOVAL

⚠ WARNING

Disconnect the product from the power source before starting this procedure.

To remove the condenser thermistor, first remove:

1 *Kickplate*
2 *Grille assembly*

Remove the Condenser Thermistor

TIP: The condenser thermistor is attached to the condenser inlet.

1 Cut the thermistor wire harness 8" (20 cm) from the head of the thermistor.

2 Remove the thermistor from the unit.

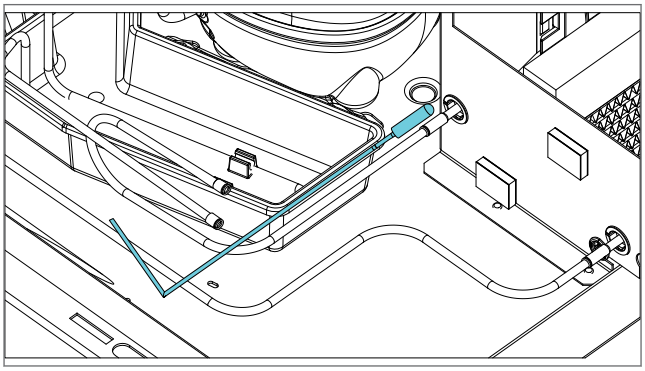

CONDENSER THERMISTOR INSTALLATION

After installing the condenser thermistor, install:

1 *Grille assembly*
2 *Kickplate*

Install the Condenser Thermistor

1 Strip the wire insulation approximately $^{1}/_{4}$" (6 mm) from the ends of the wires.

2 Place the ends of the wire leads into the pre-insulated sealed splice.

3 Crimp the splice at the middle.

4 Using a heat gun on the low setting, heat the splice so that the tubing shrinks around the wires.

5 If necessary, coil the excess thermistor wire leads so they do not interfere with operation of other components.

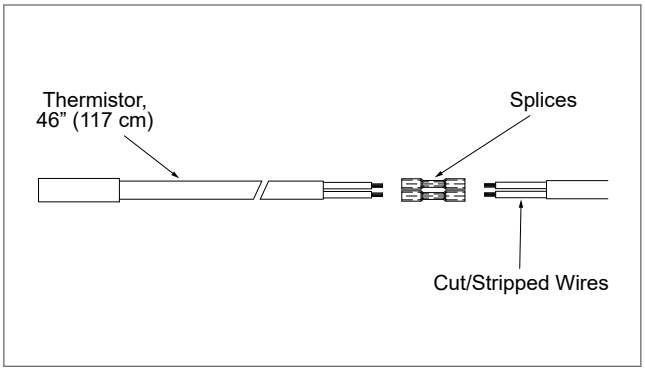

CONNECTED MODULE REMOVAL

⚠ WARNING

Disconnect the product from the power source before starting this procedure.

To remove the connected module, first remove:

1 *Kickplate*

Remove the Connected Module

1 Disconnect the connected module wire harness from the connected module.

2 Pull the connected module from the dual lock fasteners on the condenser shroud and remove the connected module from the unit.

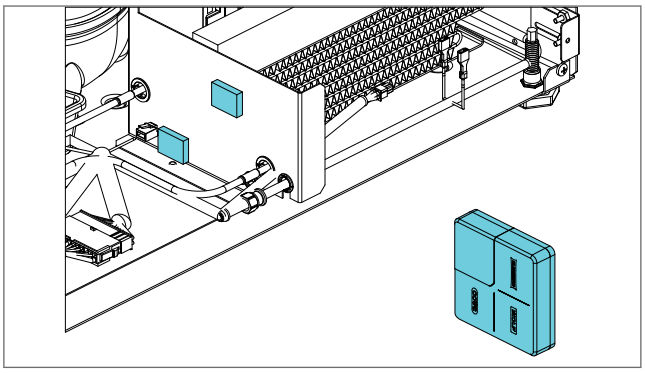

CONNECTED MODULE INSTALLATION

After installing the connected module, install:

1 *Kickplate*

Unit Tray Component Removal and Installation

Install the Connected Module (continued)

Install the Connected Module

1 Place the connected module onto the dual lock fasteners on the condenser shroud.

2 Connect the connected module wire harness to the connected module.

CONDENSER FAN MOTOR REMOVAL

⚠ WARNING

Disconnect the product from the power source before starting this procedure.

To remove the condenser fan motor, first *uninstall the unit*. Then remove:

1 *Back cover*

Remove the Condenser Fan

1 Disconnect the condenser fan wire harness from the DC wire harness.

2 Press the tab holding the condenser fan to the condenser fan shroud assembly.

3 Pull the tab side of the condenser fan toward the rear of the unit.

4 Remove the condenser fan from the unit.

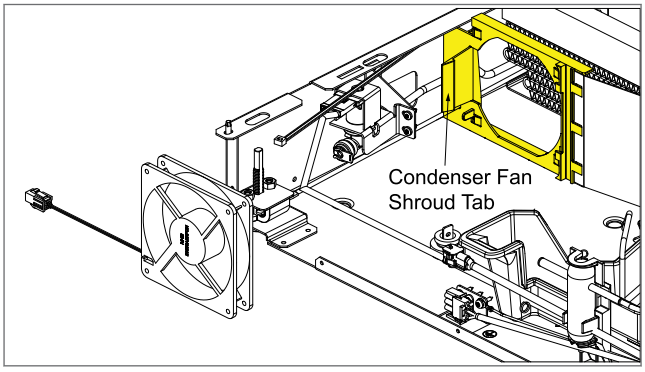

CONDENSER FAN MOTOR INSTALLATION

After installing the condenser fan motor, install:

1 *Back cover*

Then *install the unit*.

Install the Condenser Fan

1 Place the condenser fan into the slots on the condenser fan shroud.

2 Press the other side of the condenser fan into the tab on the condenser fan shroud.

3 Connect the condenser fan wire connector into the DC wire harness.

COMPRESSOR-MOUNTED INVERTER REMOVAL

⚠ WARNING

Disconnect the product from the power source before starting this procedure.

To remove the compressor-mounted inverter, first *uninstall the unit*. Then remove:

1 *Back cover*

Remove the Compressor-Mounted Inverter

1 Use a T-20 Torx bit to remove the screw from the ground wire.

2 Disconnect the two-wire connector from the DC wire harness.

3 Disconnect the two-wire connector from the AC wire harness.

4 Use a Phillips screwdriver to remove the screw from the bottom of the compressor-mounted inverter.

5 Rotate the compressor-mounted inverter clockwise, then push the compressor-mounted inverter toward the front of the unit, removing the compressor-mounted inverter from the tab.

6 Pull the compressor-mounted inverter from the unit.

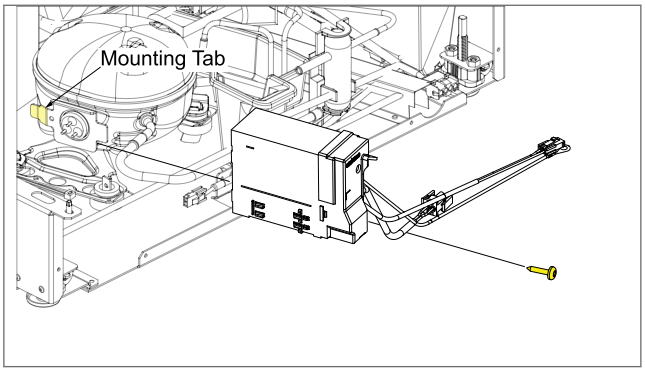

Unit Tray Component Removal and Installation

Compressor-Mounted Inverter Installation (continued)

COMPRESSOR-MOUNTED INVERTER INSTALLATION

After installing the compressor-mounted inverter, install:

1 *Back cover*

Then *install the unit*.

Install the Compressor-Mounted Inverter

1. Install the compressor-mounted inverter over the compressor mounting tab.
2. Place the compressor-mounted inverter onto the compressor.
3. Use a Phillips screwdriver to install the screw at the bottom of the compressor-mounted inverter.
4. Connect the two-wire connector to the AC wire harness.
5. Connect the two-wire connector to the DC wire harness.
6. Use a T-20 Torx bit to install the screw into the ground wire.

Sealed System Component Removal

SEALED SYSTEM COMPONENT REMOVAL

REFRIGERANT VALVE REMOVAL

⚠ WARNING

Disconnect the product from the power source before starting this procedure.

⚠ WARNING

If electrical power is supplied to the appliance, but the appliance is turned off, line voltage is still present at the main control board.

⚠ WARNING

The appliances this document covers contain R600a refrigerant in their sealed systems. R600a refrigerant is extremely flammable. Do not use a brazing torch or any hot work equipment when servicing the sealed system to avoid serious injury or death.

⚠ CAUTION

R600a refrigerant requires mineral oil in the compressor and does not tolerate contamination from other refrigerants, moisture, petroleum-based lubricants, silicone lubricants, cleaning compounds, rust inhibitors, leak detection dyes, or any other type of additive.

To remove the refrigerant valve, first *uninstall the unit*. Then remove:

1. *Back cover*
2. *Kickplate*
3. *Grille assembly*

Remove the Refrigerant Valve

1. Disconnect the wire harness from the refrigerant valve.
2. Use a file to score a line around the capillary tubes, 2" (5 cm) from the refrigerant valve.
3. Fatigue the capillary tubes around the scored line until it separates.
4. Check the separated tubing for internal burrs. If burrs exist, score, fatigue, and separate the capillary tube again.
5. Use a tube cutter to cut the inlet tube at the bend on the high-side filter drier inlet.
6. Remove the refrigerant valve and high-side filter drier from the bracket.
7. Remove the refrigerant valve and high-side filter drier from the unit.

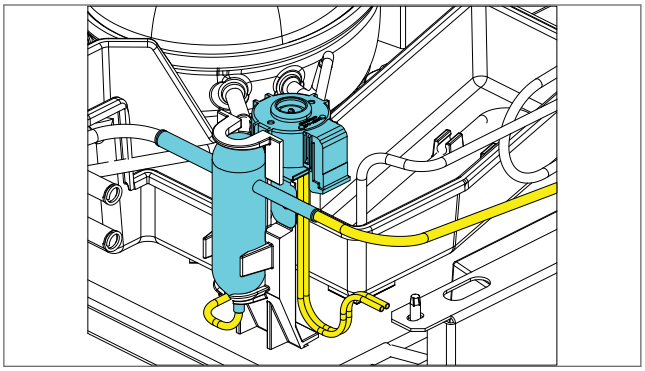

WINE EVAPORATOR REMOVAL

⚠ WARNING

Disconnect the product from the power source before starting this procedure.

⚠ WARNING

If electrical power is supplied to the appliance, but the appliance is turned off, line voltage is still present at the main control board.

⚠ WARNING

The appliances this document covers contain R600a refrigerant in their sealed systems. R600a refrigerant is extremely flammable. Do not use a brazing torch or any hot work equipment when servicing the sealed system to avoid serious injury or death.

⚠ CAUTION

R600a refrigerant requires mineral oil in the compressor and does not tolerate contamination from other refrigerants, moisture, petroleum-based lubricants, silicone lubricants, cleaning compounds, rust inhibitors, leak detection dyes, or any other type of additive.

To remove the upper wine evaporator, first *uninstall the unit*. Then remove:

1. *Wine rack*
2. *Upper wine air duct*
3. *Back cover*
4. *Refrigerant valve*

Sealed System Component Removal

To remove the lower wine evaporator, first *uninstall the unit*. Then remove:

1. *Wine rack*
2. *Lower wine air duct*
3. *Back cover*
4. *Refrigerant valve*

Remove the Wine Evaporator

IMPORTANT NOTE: Note the placement of the evaporator thermistor in the evaporator before removing it.

1. Remove the evaporator thermistor from the evaporator.
2. Use a T-20 Torx bit to remove the evaporator mounting screws.
3. Use the edge of a file to score a line around the capillary tube approximately 1" (2.5 cm) or less from the evaporator inlet. Then, fatigue the capillary tube at this line until it separates.
4. With a tube cutter, cut the suction line approximately 1" (2.5 cm) from the evaporator outlet stub.
5. Remove the evaporator from the unit.

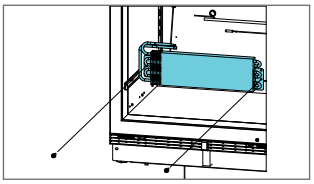

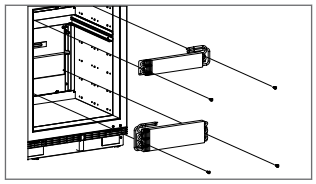

COMPRESSOR REMOVAL

⚠ WARNING

Disconnect the product from the power source before starting this procedure.

⚠ WARNING

If electrical power is supplied to the appliance, but the appliance is turned off, line voltage is still present at the main control board.

⚠ WARNING

The appliances this document covers contain R600a refrigerant in their sealed systems. R600a refrigerant is extremely flammable. Do not use a brazing torch or any hot work equipment when servicing the sealed system to avoid serious injury or death.

⚠ CAUTION

R600a refrigerant requires mineral oil in the compressor and does not tolerate contamination from other refrigerants, moisture, petroleum-based lubricants, silicone lubricants, cleaning compounds, rust inhibitors, leak detection dyes, or any other type of additive.

To remove the compressor, first *uninstall the unit*. Then remove:

1. *Back cover*
2. *Kickplate*
3. *Grille assembly*
4. *Refrigerant valve*
5. For the DEU2450W-ADA and DEU1550W, *High-side filter drier*

Remove the Compressor

1. Use a $^{5}/_{16}$" socket to remove the screws that bolt the unit tray to the cabinet.
2. Push the cabinet forward on the base, disengaging the tabs.

Sealed System Component Removal

REMOVE THE COMPRESSOR (continued)

3 Lift the right-hand side of the cabinet enough to access the compressor. Brace the right-hand side of the unit. A 2" x 4" works well.

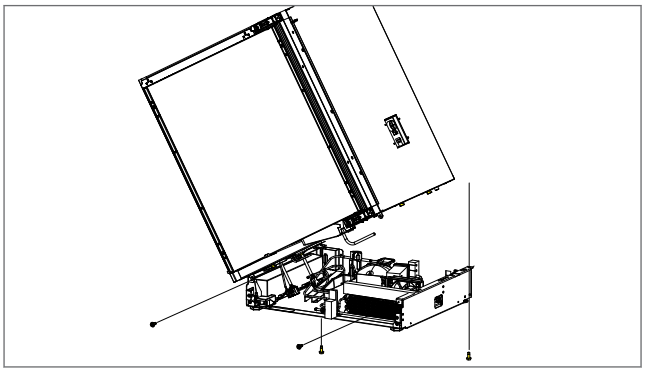

4 Use a tube cutter to cut the compressor suction line approximately 1" from the compressor inlet.

5 Use a tube cutter to cut the compressor discharge line approximately 1" from the compressor outlet.

6 Use a T-20 Torx bit to remove the compressor-mounted inverter ground screw.

7 Disconnect the compressor-mounted inverter wire harnesses.

8 Remove the compressor clips, then lift the compressor from the unit.

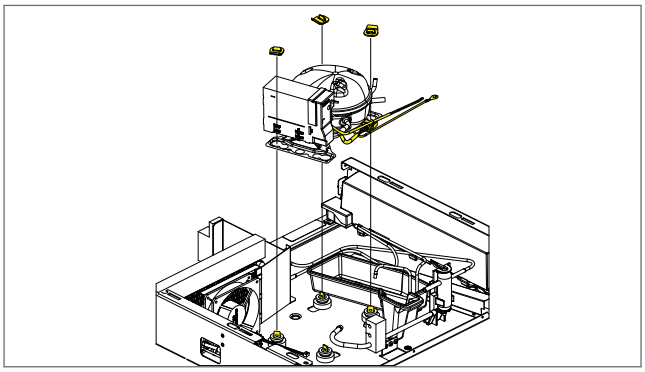

CONDENSER REMOVAL

⚠ WARNING

Disconnect the product from the power source before starting this procedure.

⚠ WARNING

If electrical power is supplied to the appliance, but the appliance is turned off, line voltage is still present at the main control board.

⚠ WARNING

The appliances this document covers contain R600a refrigerant in their sealed systems. R600a refrigerant is extremely flammable. Do not use a brazing torch or any hot work equipment when servicing the sealed system to avoid serious injury or death.

⚠ CAUTION

R600a refrigerant requires mineral oil in the compressor and does not tolerate contamination from other refrigerants, moisture, petroleum-based lubricants, silicone lubricants, cleaning compounds, rust inhibitors, leak detection dyes, or any other type of additive.

To remove the condenser, first *uninstall the unit*. Then remove:

1 *Back cover*
2 *Kickplate*
3 *Grille assembly*
4 *Refrigerant valve*
5 For the DEU2450W-ADA and DEU1550W, *High-side filter drier*

Remove the Condenser

1 Tilt the unit, and use a drill to drill out the condenser pop rivets found on the bottom of the unit.

2 Use a $^{5}/_{16}$" socket to remove the screws that bolt the unit tray to the cabinet.

3 Push the cabinet forward on the base, disengaging the tabs.

Sealed System Component Removal

REMOVE THE CONDENSER (continued)

4 Lift the right-hand side of the cabinet enough to access the condenser. Brace the right-hand side of the unit. A 2" x 4" works well.

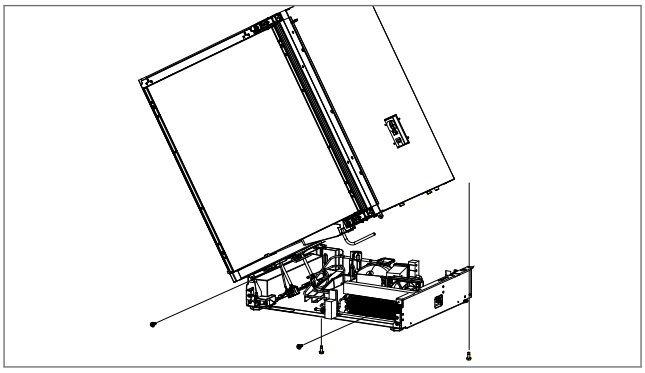

5 With a tube cutter, cut the condenser lines approximately 1" from the condenser inlets and outlets.

6 Lift the condenser with the foam block from the unit.

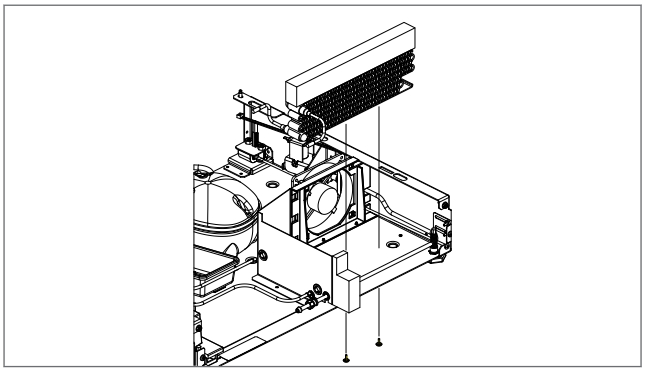

Sealed System Information

SEALED SYSTEM INFORMATION

R600A REFRIGERANT SERVICE INFORMATION

The sealed system contains R600a refrigerant. This section provides general rules for working with R600a and explains procedures for servicing the sealed system.

- Use equipment dedicated to R600a sealed system service only.
- Always evacuate R600a refrigerant to the outdoors.
- Use only nitrogen for back-flushing.
- Use only R600a refrigerant for sweep charging.
- Always replace the filter drier when servicing the sealed system.
- The filter drier must be cut from the sealed system. Never unbraze the drier, as the heat can cause combustion of residual refrigerant and drive moisture back into the sealed system.
- When the rubber plugs are pulled from the service compressor, there is an audible release of pressure. If the release of pressure is not heard, do not use the compressor.
- Do not leave the sealed system or replacement compressor open to the atmosphere for more than 10 minutes.
- Never use a brazing torch or hot work equipment.
- Use only flameless sealed system repair equipment.
- Allow the sealed system to reach room temperature before doing sealed system repairs.
- Briefly turn the compressor over to help release residual refrigerant from the oil in the compressor.
- Use of a gas metering device is recommended:
  - M40 set to 25% LEL.
  - Place the meter within 8" from the appliance.
- Only use virgin R600a refrigerant when recharging the sealed system.

⚠ CAUTION

R600a refrigerant requires mineral oil in the compressor. R600a does not tolerate contamination from other refrigerants, moisture, petroleum-based lubricants, silicone lubricants, cleaning compounds, rust inhibitors, leak detection dyes, or any other type of additive.

⚠ WARNING

The appliances this document covers contain R600a refrigerant in their sealed systems. R600a refrigerant is extremely flammable. Do not use a brazing torch or any hot work equipment when servicing the sealed system to avoid serious injury or death.

⚠ WARNING

Disconnect the electrical power to any appliance covered in this document before servicing.

⚠ WARNING

If electrical power is needed for component testing or diagnostics, disconnect the electrical power immediately after testing or diagnostics are complete. Failure to do so could cause serious injury or death.

⚠ WARNING

If electrical power is supplied to this appliance and the appliance is turned off, line voltage is still present at the main control board.

R600a Sealed System Repair Procedures (continued)

R600A SEALED SYSTEM REPAIR PROCEDURES

SEALED SYSTEM REPAIR PROCEDURES	
Problem	**Service Procedures**
Non-operating, inefficient, noisy compressor	1 Vent the refrigerant to the outdoors. 2 Replace the compressor. 3 Replace the filter drier. 4 Evacuate or sweep-charge the system. 5 Recharge system with virgin R600a refrigerant. **Note:** To check for a non-operating compressor, a hard start kit can be used.
High-side leak	1 Vent the refrigerant to the outdoors. 2 Replace the leaking part. 3 Replace the filter drier. 4 Evacuate or sweep-charge the system. 5 Recharge system with virgin R600a refrigerant.
Low-side leak	1 Vent the refrigerant to the outdoors. 2 Replace the leaking part. 3 Back-flush the high side of the sealed system. 4 If all refrigerant has escaped and the system is in vacuum, replace the compressor. 5 Replace the filter drier. 6 Evacuate or sweep-charge the system. 7 Recharge the system with virgin R600a refrigerant.
Contaminated sealed system Examples: • Burned-out compressor • Excessive moisture from leak in condensate loop or in low side • Plugged capillary tube	1 Vent the refrigerant to the outdoors. 2 Replace the leaking part. 3 Back-flush the high side of the sealed system. 4 Replace the compressor. 5 Replace the filter drier. 6 Replace the heat exchanger if the cap tube is clogged. 7 Install a low-side drier on the suction line. 8 Evacuate or sweep-charge the sealed system. 9 Recharge with virgin R600a refrigerant.
Restriction **Note:** If restriction is due to the sealed system being contaminated, see "Contaminated sealed system."	1 Vent the refrigerant to the outdoors. 2 Locate and remove the restriction, or locate and replace the part. 3 Back-flush the high side of the sealed system. 4 Replace the filter drier. 5 Evacuate or sweep-charge the system. 6 Recharge system with virgin R600a refrigerant.
Overcharge	1 Vent the refrigerant to the outdoors. 2 Replace the filter drier. 3 Evacuate or sweep-charge the system. 4 Recharge system with virgin R600a refrigerant.

SEALED SYSTEM OPERATION

The following diagrams illustrate a basic sealed system, not a specific sealed system in this product series. The components are listed in order of refrigerant flow, with an explanation of their fundamental role as part of a sealed system.

Sealed System Information

Compressor Operation (continued)

Compressor Operation

The compressor creates a high-side and low-side pressure difference in the sealed system by compressing the refrigerant gas, raising its pressure and temperature. The compressor pushes this high-pressure, high-heat gas through the door gasket seat heater loop to prevent sweating. In freezer systems, the gas also goes through drain pan heater tubing to help evaporate water in the drain pan. The high-pressure, high-heat gas then goes to the condenser.

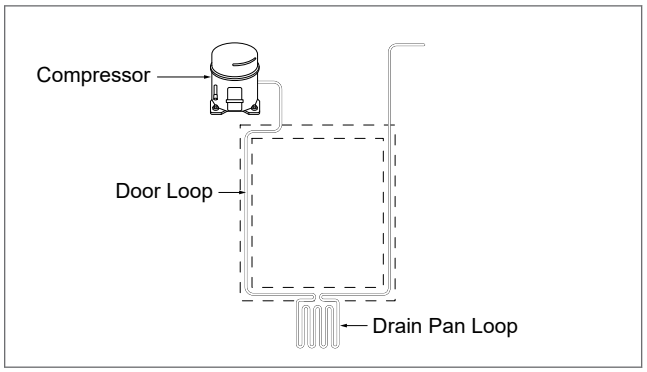

Condenser Operation

The high-pressure, high-heat gas travels through the condenser, where the heat is dissipated by the condenser fan drawing cooler air over the condenser tubing. This changes the gas into a high-pressure, warm liquid that then enters the high-side filter drier.

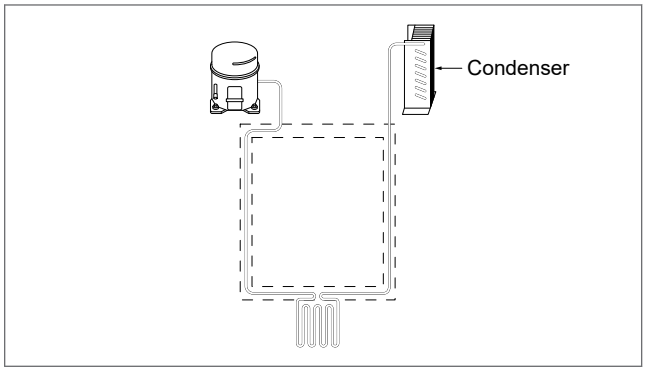

Filter Drier Operation

The high-pressure, warm liquid goes through the high-side filter drier. The drier removes moisture from the refrigerant before it enters the capillary tube.

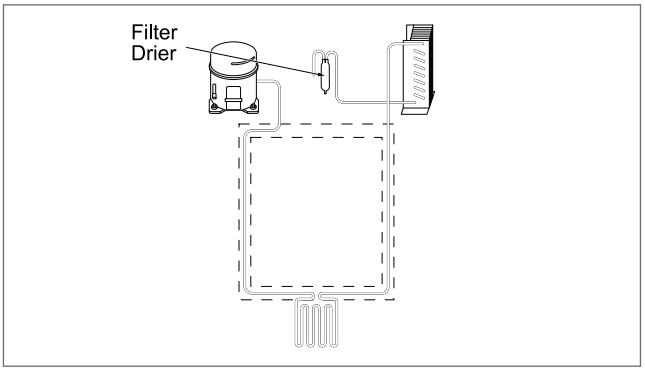

Sealed System Capillary Tube

The warm liquid refrigerant travels through the capillary tube soldered to the suction line. The two tubes soldered together create the heat exchanger. As the warm liquid refrigerant travels through the capillary tube, it gives up heat to the cool refrigerant gas in the suction line, which drops the pressure and changes the refrigerant into a low-pressure, cool liquid before it enters the evaporator.

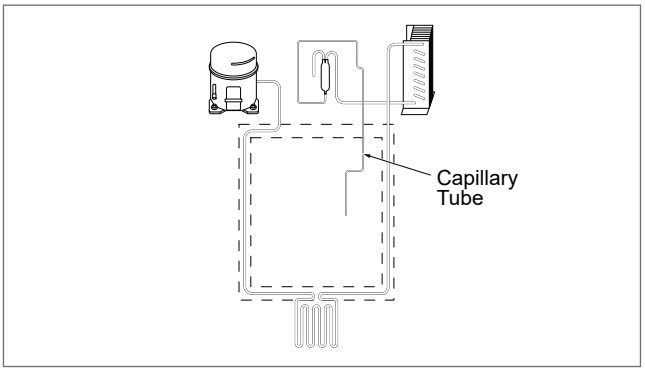

Sealed System Information

Evaporator Operation (continued)

Evaporator Operation

As the low-pressure, cool liquid refrigerant enters the evaporator, it vaporizes. This vaporization is caused by the dramatic pressure change from the refrigerant entering the larger diameter evaporator tubing from the smaller diameter capillary tubing. The vapor travels through the evaporator, absorbing heat from the compartment and gradually converting into a cool gas. This cool gas then enters the suction line.

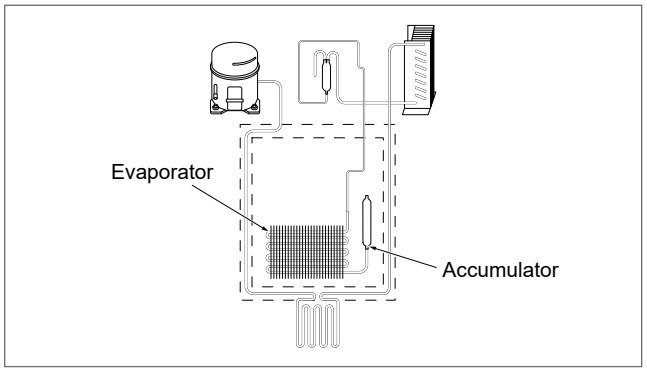

Suction Line

Cool gas travels through the suction line soldered to the capillary tube. The two tubes soldered together create the heat exchanger. As the cool refrigerant gas travels through the suction line, it absorbs heat from the warm liquid refrigerant traveling through the capillary tube, turning it into a lukewarm gas. This reduces the chance of liquid refrigerant entering the compressor. The lukewarm refrigerant gas then returns to the compressor, where the process starts over.

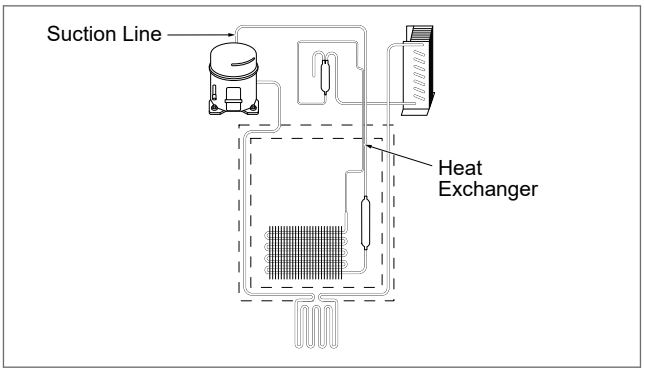

REFRIGERANT FLOW DIAGRAMS

The following refrigerant flow diagram is for the DEU2450W.

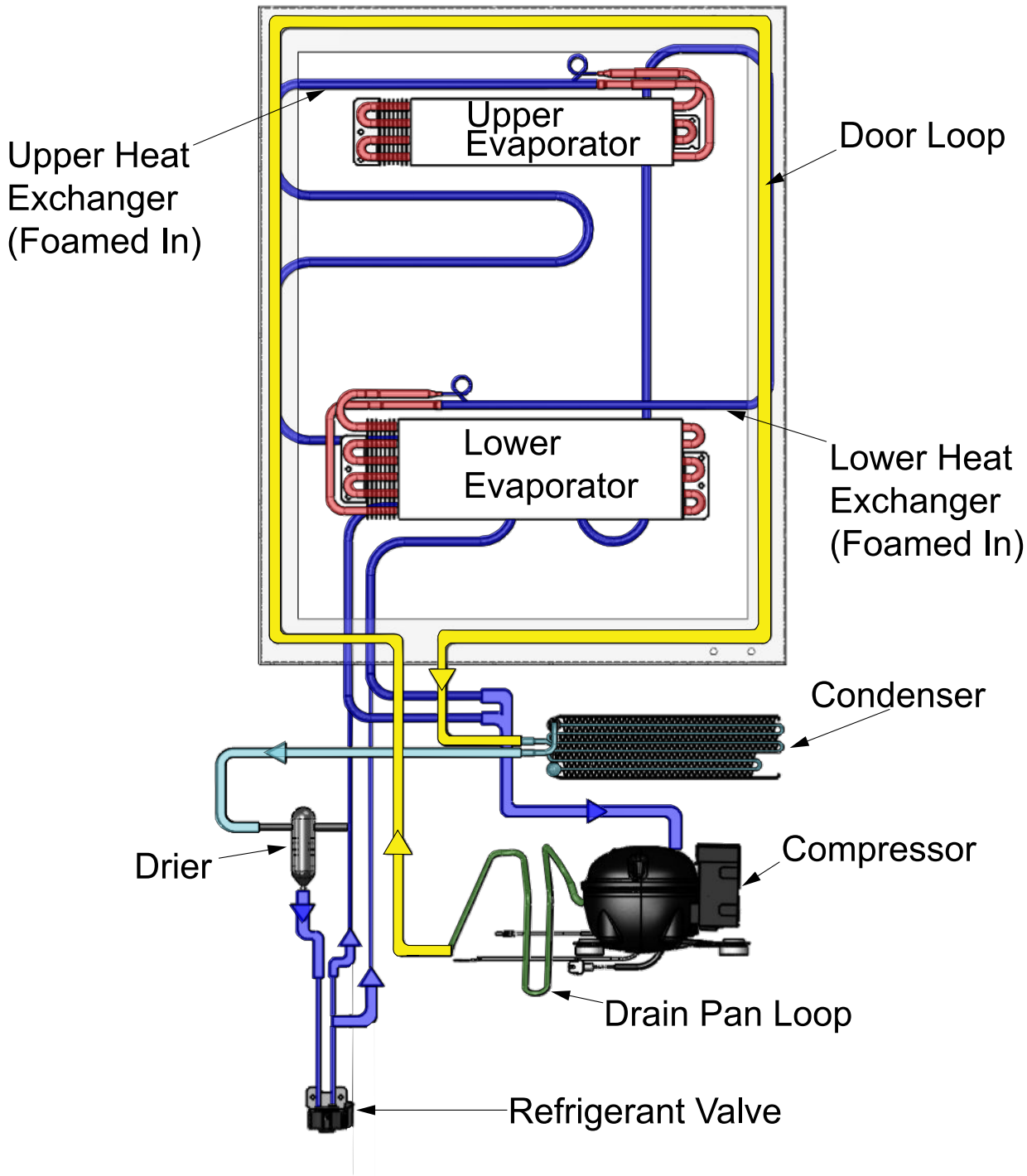

DEU2450W Sealed System Flow

LOKRING FITTINGS FOR DEU2450W

LOKRING: DEU2450W					
Component		Tubing Sizes	Quantity	LOKRING (Vulkan) Size	Vulkan Article (Part) Number
Compressor	Process line	0.335" → 1/4"	1	8.5/6 NR MS 00	L13000674
	Suction line	5/16" → .335"	1	8.5/8 NR MS 00	L13000675
	Discharge line	0.274" → 3/16"	1	7/5 NR MS 00	L13000638
Evaporator	Suction line	5/16" → 5/16"	1	8 NK MS 00	L13000592
	Capillary tube	5/16" → 0.081"	1	8/2 NR MS 00	L13000651
Condenser	All lines	1/4" → 3/16"	2	6/5 NR MS 00	L13000630
Face frame loop	All lines	3/16" → 3/16"	2	5 NK MS 00	L13000587
Drier	Process line	1/4"→ 1/4"	1	6 NK MS 00	L13000588
	Condenser line	3/16" → 3/16"	1	5 NK MS 00	L13000587
	Valve stem	0.138" → 3/16"	1	5/3.5 NR MS 00	L13000621
Valve	Capillary tube	0.110" → 0.081"	2	3/2 NR MS 00	L13000612
Suction tee	Suction lines	0.386" → 5/16"	2	10/8 NR MS 00	L13000696

Air Flow and Fan Blade Spacing

AIR FLOW AND FAN BLADE SPACING

AIRFLOW

For proper airflow, push the evaporator fan blades onto the fan motor shafts fully so the motor shafts touch the fan blade stop point.

Air Flow and Fan Blade Spacing

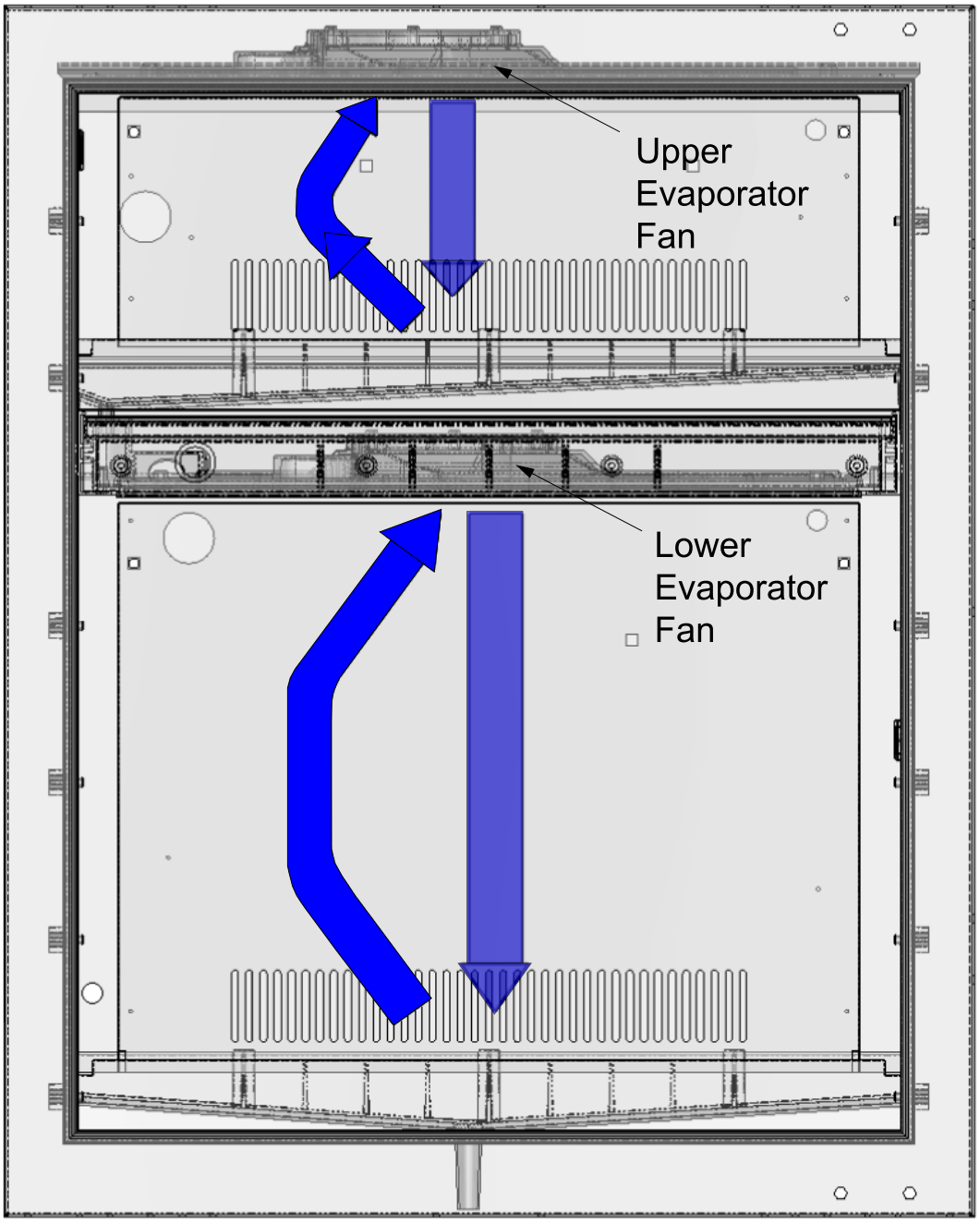

DEU2450W Airflow

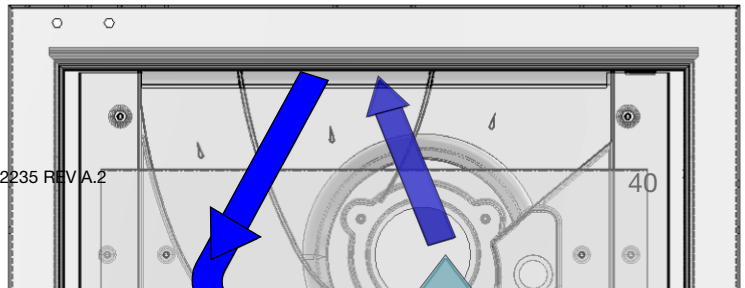

ERROR CODE TROUBLESHOOTING GUIDE

ERROR CODES			
Code	Severity	Description	Action
10 C 00	2	An open condenser thermistor.	1 Verify temperature reading. 2 Ohm thermistor. 3 Confirm connection to the control board. 4 Replace thermistor if bad.
10 C 01	2	Short in condenser thermistor.	1 Verify temperature reading. 2 Ohm thermistor. 3 Confirm connection to the control board. 4 Replace thermistor if bad.
10 C 02	2	Unstable condenser thermistor.	1 Verify temperature reading. 2 Ohm thermistor. 3 Confirm connection to the control board. 4 Replace thermistor if bad.
10 1 00	2	An open Zone 1 cabinet thermistor.	1 Verify temperature reading. 2 Ohm thermistor. 3 Confirm connection to the control board. 4 Replace thermistor if bad.
10 1 01	2	Short in Zone 1 cabinet thermistor.	1 Verify temperature reading. 2 Ohm thermistor. 3 Confirm connection to the control board. 4 Replace thermistor if bad.
10 1 02	2	Zone 1 cabinet thermistor is unstable.	1 Verify temperature reading. 2 Ohm thermistor. 3 Confirm connection to the control board. 4 Replace thermistor if bad.
10 1 10	2	An open Zone 1 evaporator thermistor.	1 Verify temperature reading. 2 Ohm thermistor. 3 Confirm connection to the control board. 4 Replace thermistor if bad.
10 1 11	2	Short in Zone 1 evaporator thermistor.	1 Verify temperature reading. 2 Ohm thermistor. 3 Confirm connection to the control board. 4 Replace thermistor if bad.
10 1 12	2	Zone 1 evaporator thermistor is unstable.	1 Verify temperature reading. 2 Ohm thermistor. 3 Confirm connection to the control board. 4 Replace thermistor if bad.
10 2 00	2	An open Zone 2 cabinet thermistor.	1 Verify temperature reading. 2 Ohm thermistor. 3 Confirm connection to the control board. 4 Replace thermistor if bad.

ERROR CODES			
Code	Severity	Description	Action
10 2 01	2	Short in Zone 2 cabinet thermistor.	1 Verify temperature reading. 2 Ohm thermistor. 3 Confirm connection to the control board. 4 Replace thermistor if bad.
10 2 02	2	Zone 2 cabinet thermistor is unstable.	1 Verify temperature reading. 2 Ohm thermistor. 3 Confirm connection to the control board. 4 Replace thermistor if bad.
10 2 10	2	An open Zone 2 evaporator thermistor.	1 Verify temperature reading. 2 Ohm thermistor. 3 Confirm connection to the control board. 4 Replace thermistor if bad.
10 2 11	2	Short in Zone 2 evaporator thermistor.	1 Verify temperature reading. 2 Ohm thermistor. 3 Confirm connection to the control board. 4 Replace thermistor if bad.
10 2 12	2	Zone 2 evaporator thermistor is unstable.	1 Verify temperature reading. 2 Ohm thermistor. 3 Confirm connection to the control board. 4 Replace thermistor if bad.
10 3 00	2	An open Zone 3 cabinet thermistor.	1 Verify temperature reading. 2 Ohm thermistor. 3 Confirm connection to the control board. 4 Replace thermistor if bad.
10 3 01	2	Short in Zone 3 cabinet thermistor.	1 Verify temperature reading. 2 Ohm thermistor. 3 Confirm connection to the control board. 4 Replace thermistor if bad.
10 3 02	2	Zone 3 cabinet thermistor is unstable.	1 Verify temperature reading. 2 Ohm thermistor. 3 Confirm connection to the control board. 4 Replace thermistor if bad.
10 3 10	2	An open Zone 3 evaporator thermistor.	1 Verify temperature reading. 2 Ohm thermistor. 3 Confirm connection to the control board. 4 Replace thermistor if bad.
10 3 11	2	Short in Zone 3 evaporator thermistor.	1 Verify temperature reading. 2 Ohm thermistor. 3 Confirm connection to the control board. 4 Replace thermistor if bad.
10 3 12	2	Zone 3 evaporator thermistor is unstable.	1 Verify temperature reading. 2 Ohm thermistor. 3 Confirm connection to the control board. 4 Replace thermistor if bad.

Troubleshooting Guides

Error Code Troubleshooting Guide

ERROR CODES			
Code	**Severity**	**Description**	**Action**
10 F 00	2	An open Zone 4 cabinet thermistor.	**1** Verify temperature reading. **2** Ohm thermistor. **3** Confirm connection to the control board. **4** Replace thermistor if bad.
10 F 01	2	Short in Zone 4 cabinet thermistor.	**1** Verify temperature reading. **2** Ohm thermistor. **3** Confirm connection to the control board. **4** Replace thermistor if bad.
10 F 02	2	Zone 4 cabinet thermistor is unstable.	**1** Verify temperature reading. **2** Ohm thermistor. **3** Confirm connection to the control board. **4** Replace thermistor if bad.
10 F 10	2	An open Zone 4 evaporator thermistor.	**1** Verify temperature reading. **2** Ohm thermistor. **3** Confirm connection to the control board. **4** Replace thermistor if bad.
10 F 11	2	Short in Zone 4 evaporator thermistor.	**1** Verify temperature reading. **2** Ohm thermistor. **3** Confirm connection to the control board. **4** Replace thermistor if bad.
10 F 12	2	Zone 4 evaporator thermistor is unstable.	**1** Verify temperature reading. **2** Ohm thermistor. **3** Confirm connection to the control board. **4** Replace thermistor if bad.
10 7 00	1	An open ambient thermistor on the control board.	Replace the control board.
15 4 00	2	Defrost relay is stuck open.	Caused by no voltage feed back through the defrost terminator. **1** Check voltage from control board to the defrost heater. **2** Check the defrost terminator. **3** Check the defrost heater. **4** Check wiring.
15 4 01	3	Defrost relay is stuck closed.	Caused by voltage feedback through the defrost terminator. **1** Check voltage from control board to the defrost heater. **2** Check the neutral side of the circuit for voltage.
20 4 50	3	Defrost heater has failed open.	Ohm the defrost heater.
35 1 00	2	Zone 1 evaporator fan is open.	**1** Check the control board. **2** Check the door/door switch. **3** Check the tachometer feedback wire. **4** Check the evaporator fan.
35 1 33	1	Zone 1 fan speed is slower than setting.	**1** Check the control board. **2** Check the tachometer feedback wire.

ERROR CODES			
Code	Severity	Description	Action
			3 Check the evaporator fan.
35 1 34	1	Zone 1 fan speed is faster than setting.	**1** Check the control board. **2** Check the tachometer feedback wire. **3** Check the evaporator fan.
35 2 00	2	Zone 2 evaporator fan is open.	**1** Check the control board. **2** Check the door/door switch. **3** Check the tachometer feedback wire. **4** Check the evaporator fan.
35 2 33	1	Zone 2 fan speed is slower than setting.	**1** Check the control board. **2** Check the tachometer feedback wire. **3** Check the evaporator fan.
35 2 34	1	Zone 2 fan speed is faster than setting.	**1** Check the control board. **2** Check the tachometer feedback wire. **3** Check the evaporator fan.
35 3 00	2	Zone 3 evaporator fan is open.	**1** Check the control board. **2** Check the door/door switch. **3** Check the tachometer feedback wire. **4** Check the evaporator fan.
35 3 33	1	Zone 3 fan speed is slower than setting.	**1** Check the control board. **2** Check the tachometer feedback wire. **3** Check the evaporator fan.
35 3 34	1	Zone 3 fan speed is faster than setting.	**1** Check the control board. **2** Check the tachometer feedback wire. **3** Check the evaporator fan.
35 C 00	2	Condenser fan is open.	**1** Check the control board. **2** Check the tachometer feedback wire. **3** Check the evaporator fan.
35 C 33	1	Condenser fan speed is slower than setting.	**1** Check the control board. **2** Check the tachometer feedback wire. **3** Check the evaporator fan.
35 C 34	1	Condenser fan speed is faster than setting.	**1** Check the control board. **2** Check the tachometer feedback wire. **3** Check the evaporator fan.
40 1 40	3	Zone 1 excessive compressor runtime.	Verify performance of unit and check: **1** Door leaks. **2** Door ajar. **3** Evaporator fan. **4** Condenser fan. **5** Frozen evaporator. **6** Cabinet and evaporator thermistors. **7** System charge.
40 2 40	3	Zone 2 excessive compressor runtime.	Verify performance of unit and check:

ERROR CODES			
Code	**Severity**	**Description**	**Action**
			1 Door leaks. **2** Door ajar. **3** Evaporator fan. **4** Condenser fan. **5** Frozen evaporator. **6** Cabinet and evaporator thermistors. **7** System charge.
40 3 40	3	Zone 3 excessive compressor runtime.	Verify performance of unit and check: **1** Door leaks. **2** Door ajar. **3** Evaporator fan. **4** Condenser fan. **5** Frozen evaporator. **6** Cabinet and evaporator thermistors. **7** System charge.
40 4 40	3	Zone 4 excessive compressor runtime.	Verify performance of unit and check: **1** Door leaks. **2** Door ajar. **3** Evaporator fan. **4** Condenser fan. **5** Frozen evaporator. **6** Cabinet and evaporator thermistors. **7** System charge.
40 1 09	5	Zone 1 house alarm.	Zone temperature remained above or below the alarm threshold for an extended time: **1** Door leaks. **2** Door ajar. **3** Evaporator fan. **4** Condenser fan. **5** Frozen evaporator. **6** Cabinet and evaporator thermistors. **7** System charge.
40 2 09	5	Zone 2 house alarm.	Zone temperature remained above or below the alarm threshold for an extended time: **1** Door leaks. **2** Door ajar. **3** Evaporator fan. **4** Condenser fan. **5** Frozen evaporator. **6** Cabinet and evaporator thermistors. **7** System charge.
40 3 09	5	Zone 3 house alarm.	Zone temperature remained above or below the alarm threshold for an extended time: **1** Door leaks. **2** Door ajar. **3** Evaporator fan. **4** Condenser fan. **5** Frozen evaporator.

ERROR CODES			
Code	Severity	Description	Action
			6 Cabinet and evaporator thermistors. **7** System charge.
40 9 40	1	Dispenser excessive runtime.	Dispenser switch was active for more than 150 seconds in a 15 minute window. **1** Stuck dispenser keys. **2** Flooding. After 15 minutes of an inactive switch, dispenser function is re-enabled.
45 1 00	1	Open in Zone 1 light circuit.	**1** Check the wire harness is connected correctly. **2** Check the voltage to the light circuit. **3** Check the continuity of the LED panel or tube.
45 1 01	1	Short in Zone 1 light circuit.	**1** Check the wire harness is connected correctly. **2** Check the voltage to the light circuit. **3** Check the continuity of the LED panel or tube.
45 2 00	1	Open in Zone 2 light circuit.	**1** Check the wire harness is connected correctly. **2** Check the voltage to the light circuit. **3** Check the continuity of the LED panel or tube.
45 2 01	1	Short in Zone 2 light circuit.	**1** Check the wire harness is connected correctly. **2** Check the voltage to the light circuit. **3** Check the continuity of the LED panel or tube.
45 3 00	1	Open in Zone 3 light circuit.	**1** Check the wire harness is connected correctly. **2** Check the voltage to the light circuit. **3** Check the continuity of the LED panel or tube.
45 3 01	1	Short in Zone 3 light circuit.	**1** Check the wire harness is connected correctly. **2** Check the voltage to the light circuit. **3** Check the continuity of the LED panel or tube.
45 F 00	1	Open in Zone 4 light circuit.	**1** Check the wire harness is connected correctly. **2** Check the voltage to the light circuit. **3** Check the continuity of the LED panel or tube.
45 F 01	1	Short in Zone 4 light circuit.	**1** Check the wire harness is connected correctly. **2** Check the voltage to the light circuit. **3** Check the continuity of the LED panel or tube.
95 1 00	1	Door #1 excessive open time.	**1** Check the door is not blocked. **2** Check the door magnet retainer is in place. **3** Check the door switch is operating correctly. **4** Check the door switch wire harness.
95 2 00	1	Door #2 excessive open time.	**1** Check the door is not blocked. **2** Check the door magnet retainer is in place. **3** Check the door switch is operating correctly. **4** Check the door switch wire harness.
95 3 00	1	Door #3 excessive open time.	**1** Check the door is not blocked. **2** Check the door magnet retainer is in place.

ERROR CODES			
Code	Severity	Description	Action
			3 Check the door switch is operating correctly. **4** Check the door switch wire harness.
95 F 00	1	Door #4 excessive open time.	**1** Check the door is not blocked. **2** Check the door magnet retainer is in place. **3** Check the door switch is operating correctly. **4** Check the door switch wire harness.

GENERAL TROUBLESHOOTING GUIDE

GENERAL TROUBLESHOOTING GUIDE		
Problem	**Possible Cause**	**Test/Action**
A. “EE” displayed in place of freezer temperature with “SERVICE” flashing	Freezer compartment thermistor disconnected, shorted, or misread	**1** Check freezer compartment thermistor electrical connections from thermistor to control board. **2** Reconnect/repair connections. **3** Check resistance of freezer compartment thermistor for 30,000 to 33,000 ohms at 32°F (0°C). Replace if defective.
B. “EE” displayed in place of refrigerator temperature with “SERVICE” flashing	Refrigerator compartment thermistor disconnected, shorted, or misread	**1** Check refrigerator compartment thermistor electrical connections from thermistor to control board. **2** Reconnect/repair connections. **3** Check resistance of refrigerator compartment thermistor for 30,000 to 33,000 ohms at 32°F (0°C). Replace if defective.
C. Warm or normal temperatures displayed with “SERVICE” alone flashing	Excessive compressor or evaporator fan run	**1** Initiate Diagnostic Mode, and see the Error Code Troubleshooting Guide.
	Refrigerator evaporator thermistor disconnected, shorted, or misread	**1** Check evaporator thermistor electrical connections from thermistor to control board. **2** Reconnect/repair connections. **3** Check resistance of evaporator thermistor for 30,000 to 33,000 ohms at 32°F (0°C). Replace if defective.
D. Warm or normal temperatures displayed with non-flashing “SERVICE” displayed	Error codes observed in diagnostic mode, but not cleared from memory	**1** Enter diagnostic mode to observe error codes. See the Error Code Troubleshooting Guide. **2** Verify the unit was repaired for error codes displayed. **3** Press appropriate WARMER and COLDER keys for 15 seconds to clear error codes.
E. Erratic temperatures with or without “SERVICE” flashing	Control board configured for wrong model	**1** Initiate Manual Model Configuration Mode, and reconfigure to correct model.
F. Warm refrigerator temperatures, “SERVICE” not displayed or flashing	No power to unit	**1** Check power to unit, plug unit in, or switch supply circuit breaker on.
	Unit switched off	**1** Check for “OFF” displayed at LCD. If off, press POWER key.
	Unit in Showroom Mode	**1** Switch unit to off, then press and hold WARMER and COLDER keys, and press POWER key.
	Control set too high	**1** Check setpoint. If high, adjust. .

GENERAL TROUBLESHOOTING GUIDE		
Problem	**Possible Cause**	**Test/Action**
	Warm food load	1 Check contents of refrigerator for warm food load. 2 Advise customer.
	High room ambient temperature	1 Advise customer that the unit performs best between 60°F (16°C) and 90°F (32°C).
	Door ajar • Food product obstruction • Door closer defective	1 Move obstruction. 2 Replace door closer.
	Faulty light switch	1 Check operation of light switch (lights off when switch is pressed). 2 Replace switch if defective.
	Evaporator fan fault • Fan blade obstructed or out of position • Evaporator fan motor disconnected • Power to fan fault, or fan motor defective **Note:** Compressor must be running	1 Move obstruction, or reposition blade. 2 Check electrical connections and continuity from control board to motor. Reconnect/repair bad connections. 3 With light switch pressed, check for AC voltage from control board to fan motor. Replace control board if defective, or replace motor if defective.
	Compartment thermistor misread	1 Check resistance of refrigerator compartment thermistor for 30,000 to 33,000 ohms at 32°F (0°C). 2 Replace if defective.
	Air baffle control fault (model DEU2450CI) • Baffle control stuck • Baffle control disconnected, defective, or not receiving signal from control board	1 Manually open/close air baffle control. If movement is not smooth, replace baffle control. 2 With light switch pressed, initiate Manual Compartment Activation Mode for refrigerator compartment and observe baffle operation. If baffle does not open within 3 minutes: a Check electrical connections from baffle control to control board. Reconnect/repair bad connections. b If electrical connections and wiring are good, and baffle moves freely, replace control board. **Note:** Low voltage circuit. Do NOT apply line voltage.
	Evaporator heavily frosted • Door ajar • Evaporator fan fault • Compartment thermistor misread	1 See "Door ajar" above. 2 See "Evaporator fan fault" above. 3 See "Thermistor misread" above.
	Power to compressor fault	1 Check for AC voltage at control board. 2 Replace control board if defective.
	Sealed system fault • Sealed system leak	See the Sealed System Troubleshooting Guide.

GENERAL TROUBLESHOOTING GUIDE		
Problem	**Possible Cause**	**Test/Action**
	• Sealed system restriction • Inefficient compressor	
G. Refrigerator temperatures too cold with or without "SERVICE" flashing (model DEU2450CI)	See air baffle control fault above (under problem “F”)	See air baffle control fault above (under problem “F”)
H. Warm freezer temperatures, “SERVICE” not displayed or flashing	No power to unit	1 Check power to unit, plug unit in, or switch supply circuit breaker on.
	Unit switched off	1 Check for “OFF” displayed at LCD. If off, press POWER key.
	Unit in Showroom Mode	1 Press POWER key to OFF, then press and hold WARMER and COLDER keys, and press POWER key.
	Control set too high	1 Check setpoint. If high, adjust.
	Warm food load	1 Check contents of freezer for warm food load. 2 Advise customer.
	High room ambient temperature	1 Advise customer that the unit performs best between 60°F (16°C) and 90°F (32°C).
	Door ajar • Food product obstruction • Door closer defective	1 Move obstruction. 2 Replace door closer.
	Condenser air flow • Dirty condenser • Condenser fan blade obstructed, loose, or defective • Condenser fan motor disconnected • Condenser fan motor defective	1 Clean condenser. 2 Remove obstruction, tighten blade, or replace if defective. 3 Check continuity from motor to compressor. reconnect/repair wiring or connections. 4 Check for AC voltage to motor. Replace if defective.
	Faulty light switch	1 Check operation of light switch (lights off when switch is pressed). 2 Replace switch if defective.
	Evaporator fan fault • Fan blade obstructed or out of position • Evaporator fan motor disconnected • Power to fan fault, or fan motor defective **Note:** Compressor must be running	1 Move obstruction, or reposition blade. 2 Check electrical connections and continuity from control board to motor. Reconnect/repair bad connections. 3 With light switch pressed, check for AC voltage from control board to fan motor. Replace control board if defective, or replace motor if defective.
	Compartment thermistor misread	1 Check resistance of freezer compartment thermistor for 30,000 to 33,000 ohms at 32°F (0°C). Replace if defective.
	Evaporator heavily frosted	1 See "Door ajar" above.

GENERAL TROUBLESHOOTING GUIDE		
Problem	**Possible Cause**	**Test/Action**
	• Door ajar • Evaporator fan fault • Compartment thermistor misread • Defrost heater disconnected or faulty • Defrost terminator disconnected or faulty • Defrost sense line disconnected • No power from control board to defrost circuit	**2** See "Evaporator fan fault" above. **3** See "Thermistor misread" above. **4** Check electrical connections. Reconnect/repair bad connections. **5** Check resistance of heater, 30-38 ohms, replace if defective. **6** Check electrical connections, reconnect/repair connections, or replace bad terminator. **7** Manually initiate defrost: press ICE key for 10 seconds. If defrost lasts exactly 5 minutes, check all connections of gray/white wire from terminator to control board. Reconnect/repair bad connections. **8** Manually initiate defrost: Press ICE key for 10 seconds. Check for AC voltage at control board. Replace control board if defective.
	Power to compressor fault	**1** Check for AC voltage at control board. **2** Replace control board if defective.
	Sealed system fault • Sealed system leak • Sealed system restriction • Inefficient compressor	See the Sealed System Troubleshooting Guide.
I. Product temperature 10° or more colder than displayed temperature	Compartment thermistor misread	**1** Check resistance of compartment thermistor for 30,000 to 33,000 ohms at 32°F (0°C). **2** Replace if defective.

J.
• "Extremely" cold temperatures displayed:
  • 1° to 7° in refrigerator
  • -21° to -15° in freezer
• If outside US - "extremely" warm temperatures displayed:
  • 34° to 45° in refrigerator
  • -5° to 5° in freezer
	• Control set to display Celsius
	• If outside US: control set to display Fahrenheit
		1 Change temperature units of measure to Fahrenheit.
		2 If outside US: change temperature units of measure to Celsius.

K. No ice	No water supply to unit	**1** Connect or turn on the water supply.
	Unit has not run long enough	**1** The freezer must be 17°F (-8°C) for the ice maker to operate, approximately 24 hours after unit installation. **2** Advise the customer.
	Warm freezer temperature **Note:** Freezer must be 17°F (-8°C) or colder for ice maker to function.	See problems A, C, D, E, and G.
	Shut-off arm stuck in up/off position	**1** Check the shut-off arm. If it is stuck in the up/off position, correct the problem.

GENERAL TROUBLESHOOTING GUIDE		
Problem	**Possible Cause**	**Test/Action**
	Disconnected or defective water valve	1 Check the electrical connections and water connections at the water valve. 2 Reconnect or repair the connections. 3 Check the resistance of the water valve. Replace if defective.
	No power to ice maker	1 Check for power to the ice maker. 2 If there is no power, repair or reconnect the wiring.
	Frozen fill tube - Water supply problem	1 Check water supply pressure for a "constant" 20-100 psi. 2 If not, advise the customer.
M. Ice maker produces hollow cubes	Freezer too cold, cycles ice maker too soon	See Problem H.
	Ice maker thermostat fault	1 Replace the ice maker.
N. Ice maker produces small cubes	Water supply problem	1 Check the water supply pressure; it must be a constant 20-100 psi. 2 If not, advise the customer.
	Ice maker not level	1 Check the leveling of the ice maker. 2 Adjust if necessary.
O. Water or clump of ice in ice bucket	Ice maker not level	1 Check the leveling of the ice maker; adjust if necessary.
	Water valve energized for too long	1 Check the ice maker for a jammed ice cube; clear jam if present. 2 Check the leveling of the ice maker; level if necessary. 3 Check the position of the fill cup. Reposition if in ice path. 4 Check the water supply pressure; it must be a constant 20-100 psi. If not, advise the customer. 5 Check the water valve operation, opens when AC voltage is applied closes completely when AC voltage is removed. Water valve ohms = 160. Replace if defective.
	Intermittent warm freezer temperatures	See problems A, C, D, E, and H.
P. No LCD	Unit in Sabbath Mode	1 Exit Sabbath Mode.
	Display wire harness disconnected or faulty	1 Check the display wire harness and connections. 2 Reconnect, repair, or replace bad wiring.
	Control panel assembly defective, or no signal read at control board	1 Replace the control panel.
Q. No lights	No power to unit	1 Check power to the unit, plug the unit in or switch the supply circuit breaker on.
	Unit switched off	1 Switch the unit on.

GENERAL TROUBLESHOOTING GUIDE		
Problem	**Possible Cause**	**Test/Action**
	Unit in Sabbath Mode	1 Exit Sabbath Mode.
	Defective or loose light bulb(s)	1 Install a known-good light bulb.
	Light switch disconnected or defective	1 Check the wire connections at the light switch. 2 Reconnect/repair. 3 Check for AC voltage to and from the light switch. 4 Replace the switch if defective.
	Lighting system wiring disconnected or defective	1 Check continuity from the light sockets to the switch. 2 Reconnect/repair or replace defective components.
	No power form control board **Note:** See "Unit in Sabbath Mode" above.	1 Check for AC voltage from control board. 2 Replace board if defective. **Note:** See "Unit in Sabbath Mode" above.
R. Lights stay on when door is closed	(model DEU2450B) Accent lights switched on	1 Turn off accent lights.
	Door ajar • Food product obstruction • Door closer defective	1 Move obstruction. 2 Replace door closer.
	Faulty light switch	1 Check operation of light switch (lights off when switch is pressed). 2 Replace switch if defective.
S. Door not able to close completely	Food product obstruction	1 Move obstruction.
	Door closer defective	1 Replace door closer.
T. Door uneven	Unit not level	1 Check unit leveling.

COMPONENT TESTING

Test the Condenser Fan (Four Wire - Direct Current)

The condenser fan has 12 VDC power at all times. Compressor operation determines condenser fan operation. See the Technical Data section for the condenser fan rating.

Condenser Fan Wiring - Direct Current

⚠ CAUTION

Wiring colors can change without notice. Check the wire colors with the wiring diagram provided with the unit.

The condenser fan uses a four-wire system to control fan operation. The four wires are fan power, variable speed control out, tachometer input, and fan return. Measuring the DC voltage between these wires should produce the following results.

CONDENSER FAN WIRE COLORS				
	Fan Power	**Variable Speed**	**Tachometer**	**Fan Return**
Condenser Fan	Red/ Yellow	Yellow/ Orange	Blue/ Orange	Black/ Yellow

FAN DC VOLTAGE TEST RESULTS	
Test	**Measure Result**
Measure fan power to fan return.	12 VDC
Measure variable speed control to fan return.	12 VDC at high speed

CONDENSER FAN WIRING - DIRECT CURRENT (continued)

FAN DC VOLTAGE TEST RESULTS	
Test	Measure Result
Measure tachometer input to fan return.	Variable VDC based on fan speed

TIP: Test voltage under load.

Test the Evaporator Fan (Direct Current)

The evaporator fan has 12 VDC power at all times. Evaporator temperature determines the fan speed. See the Technical Data section for the evaporator fan rating.

Evaporator Fan Wiring

⚠ CAUTION

Wiring colors can change without notice. Check the wire colors with the wiring diagram provided with the unit.

The evaporator fan uses a four-wire system to control fan operation. The four wires are fan power, variable speed control out, tachometer input, and fan return. Measuring the DC voltage between these wires should produce the following results.

EVAPORATOR FAN WIRE COLORS				
Evaporator Fan	Fan Power	Variable Speed	Tachometer	Fan Return
All Evaporator Fans	Red	Yellow	Blue	Black/Red

FAN DC VOLTAGE TEST RESULTS	
Test	Measure Result
Measure fan power to fan return.	12 VDC
Measure variable speed control to fan return.	12 VDC at high speed
Measure tachometer input to fan return.	Variable VDC based on fan speed

TIP: Test voltage under load.

Test the Water Isolation Valve

⚠ CAUTION

Wiring colors can change without notice. Check the wire colors with the wiring diagram provided with the unit.

The Water Flow diagram shows the location of the isolation valve.

To measure the resistance of the isolation valve solenoid:

1. Turn off the power to the unit.
2. Disconnect the wire harness from the isolation valve solenoid.
3. Measure the resistance between the isolation valve solenoid terminals. Compare the results with the Technical Data table.

Test the Ice Maker Valve

⚠ CAUTION

Wiring colors can change without notice. Check the wire colors with the wiring diagram provided with the unit.

To measure the resistance of the ice maker valve solenoid:

1. Turn off the power to the unit.
2. Disconnect the wire harness from the ice maker valve solenoid.
3. Measure the resistance between the ice maker valve solenoid terminals. Compare the results with the Technical Data table.

Test the Drain Trough Heater

⚠ CAUTION

Wiring colors can change without notice. Check the wire colors with the wiring diagram provided with the unit.

Confirm the drain trough heater is working by turning on the defrost system in manual component activation mode. See the instructions in the Controls and Operation section of the service manual. Remove the freezer air duct to confirm that the drain trough heater is operating.

To measure the resistance of the drain trough heater:

1. Turn off the power to the unit.
2. Disconnect the harness of the drain trough heater from the defrost harness.
3. Measure the resistance between the terminals of the drain trough heater. Compare the results with the Technical Data table.
4. If the results are good, check the continuity across the drain trough heater connector.
5. If the results are bad, replace the drain trough heater.

Test the Compressor

⚠ CAUTION

Wiring colors can change without notice. Check the wire colors with the wiring diagram provided with the unit.

TEST THE COMPRESSOR (continued)

Confirm the compressor is working by turning on the compressor in manual component activation mode. See the instructions in the Controls and Operation section of the service manual. If the compressor does not come on, check the inverter and compressor.

To measure the voltage and frequency to the inverter with a digital multimeter:

INVERTER VOLTAGE AND FREQUENCY TEST					
Product	Compressor	Wire #1	Wire #2	Voltage	Frequency
DEU	On	Pink	Brown	~7 VDC	~ 107 Hz (DEU2450RO ~150 HZ)
Classic Refrigerator	On	Pink	Brown	~7 VDC	~ 107 Hz
Classic Freezer	On	Pink/ Yellow	Brown/ Yellow	~7 VDC	~ 107 Hz

To measure the voltage to the compressor with a digital multimeter:

COMPRESSOR VOLTAGE TEST					
Unit	Compressor	Wire #1	Wire #2	Voltage	ICB Voltage
Refrigerator	On	Gray	White	120 VAC	240 VAC
Freezer	On	Purple	White	120 VAC	240 VAC

Defrost Heater Test Procedure

Confirm the defrost heater is working by turning on the defrost system in manual component activation mode, which lasts for five minutes. See the instructions in the Controls and Operation section.

⚠ WARNING

Disconnect electrical power to any appliance covered in this manual before servicing. If electrical power is needed for component testing or diagnostics, disconnect electrical power immediately after testing or diagnostics are completed. Failure to do so could cause serious injury or death!

⚠ CAUTION

Wiring colors can change without notice. Check the wire colors with the wiring diagram provided with the unit.

If the defrost heater is not turning on, do the following checks to find the issue.

DEFROST HEATER TEST PROCEDURES		
Measurement		**Procedure**
Defrost heater resistance	1	Turn off the power to the unit.
	2	Disconnect the defrost heater wire harness from the unit wire harness.
	3	Measure the resistance between the defrost heater terminals. Compare the results with the Technical Data table.
	4	If the results are good, check the defrost terminator for continuity.
	5	If the results are bad, replace the defrost heater.
Defrost terminator resistance **Note:** Verify the terminator is cold enough to close before testing.	1	Run the freezer system with the door or drawer open for five minutes to verify the defrost terminator is closed.
	2	Turn the power off to the unit.
	3	Disconnect the defrost terminator from the defrost wire harness.
	4	Measure the resistance across the terminals of the defrost terminator connector.
	5	If the resistance is very large or infinite, the defrost terminator is open. Replace the defrost terminator.
	6	If the resistance is low or zero, the defrost terminator is good. Check the voltage to the defrost heater.
Defrost heater voltage	1	Turn on the defrost system in manual component activation mode.
	2	Back-pin the gray/white wire on the defrost connector. In volts AC, measure the voltage from the gray/white wire to ground.
	3	If the voltage is approximately 115 VAC, the voltage to the defrost heater is good.
	4	If the voltage is good, turn on the defrost system again and see if it is operating correctly. It might be necessary to cool the freezer evaporator to close the defrost terminator first.
	5	If the voltage is not good, measure the voltage to the defrost terminator.
Defrost terminator voltage	1	Turn on the defrost system in manual component activation mode.
	2	Back-pin the blue wire in the defrost terminator connector. In volts AC, measure the voltage from the blue wire to ground.
	3	If the voltage is approximately 115 VAC, the voltage to the defrost terminator is good.
	4	If the voltage is good, remove the defrost terminator, and check the connections from the defrost terminator to the defrost heater.
	5	If the voltage is not good, measure the voltage from the control board.
Control board voltage	1	Turn on the defrost system in manual component activation mode.
	2	Back-pin the blue wire connector, and in VAC, measure the voltage from the blue wire to ground.
	3	If the voltage is approximately 115 VAC, the voltage to the defrost terminator is good.
	4	If the voltage is good, turn off the power to the unit. Check the continuity of the blue wire from the control board to the unit harness connector, across the unit harness connector, and from the cabinet side of the unit harness to the defrost terminator connector.
	5	If the voltage is not good, turn off the power to the unit, disconnect the blue wire, and measure the continuity across the blue wire connector.
	6	If the continuity across the blue wire connector is good, replace the control board.

DEU2450W AND DEU2450W/ADA TECHNICAL DATA

IMPORTANT NOTE: Always check serial tag for exact charge.

DEU2450W AND DEU2450W/ADA TECHNICAL DATA	
Parameter	**Refrigerator**
R600a charge	• PTS #23168683 = 22.7 g • SWS #23168683 = 28.3 g • ADA - 31.2 g
Normal operating pressures (low side)	• -5 psig • ADA - 0 psig
Normal operating pressures (high side)	• 45 psig • ADA - 65 psig
Equalized system pressure	• 20 psig • ADA - 20 psig
Variable speed compressor, 7042432	FMSA4C
Defrost method	Thermistor controlled adaptive defrost using the ambient heaters.
Thermistors at 32°F (0°C)	30000 - 33000 Ω

DEU2450W AND DEU2450W/ADA TECHNICAL DATA			
Component	**Voltage**	**Watts**	**Amperage**
Evaporator fan, 7042437	7 - 13.8 VDC	2.4 W (calculated - 12 VDC)	.20 A
Condenser fan, 7042316	12 VDC	4.56 W (calculated)	.38 A
Ambient heater, 7042624	12 VDC	12 W	1 A (calculated)

DEU LOW VOLTAGE WIRING

LOW VOLTAGE WIRING DIAGRAM
MODELS: DEU2450R-RO, DEU2450B-BG
DEU2450R/ADA, DEU2450BG/ADA, DEU2450W-ADA
PART NUMBER: 9049910 REV. A

⚠ WARNING

-THIS WIRING INFORMATION IS PROVIDED FOR USE BY QUALIFIED SERVICE PERSONNEL ONLY.
-DISCONNECT APPLICANCE FROM ELECTRICAL SUPPLY BEFORE BEGINNING SERVICE.
-BE SURE ALL GROUNDING DEVICES ARE CONNECTED WHEN SERVICE IS COMPLETE.
-FAILURE TO OBSERVE THE ABOVE WARNINGS MAY RESULT IN SEVERE ELECTRICAL SHOCK.

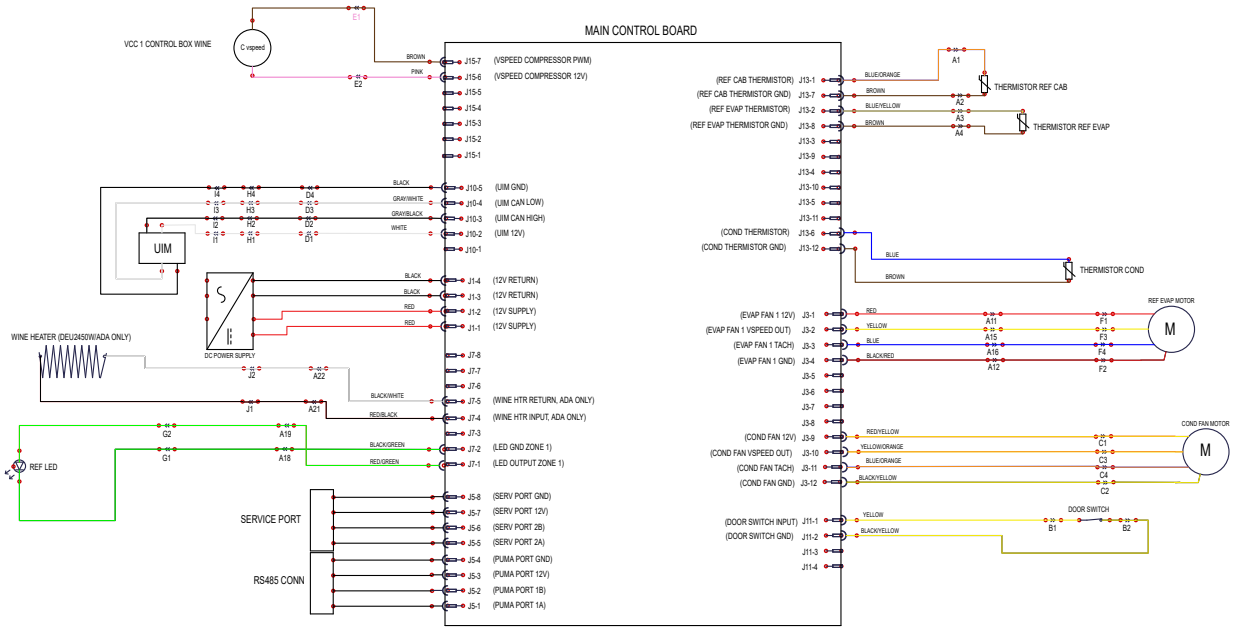

WIRING DIAGRAM
MODEL: DEU2450W
Low Voltage
PART NUMBER 9036975 Rev A

⚠WARNING

- This wiring information is provided for use by qualified service personnel only.
- Disconnect appliance from electrical supply before beginning service.
- Be sure all grounding devices are connected when service is complete.
- Failure to observe the above warnings may result in severe electrical shock.

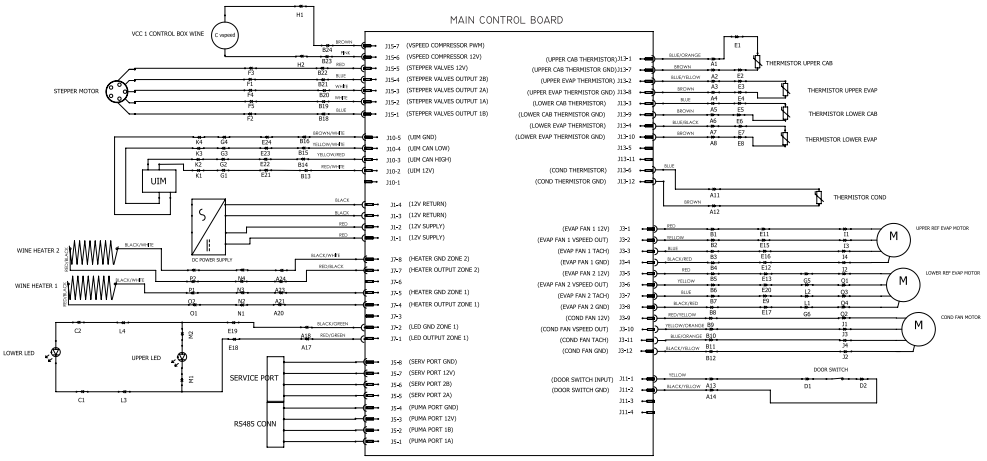

CIRCUIT	DESCRIPTION	FUNCTION	WIRE COLOR
	HIGH VOLTAGE CIRCUITS		
J2-1	UNUSED	UNUSED	UNUSED
J2-2	COMP	POWERS FZ COMPRESSOR	GRAY
J2-3	L1	L1	BLACK
J12-1	UNUSED	UNUSED	UNUSED
J12-2	UNUSED	UNUSED	UNUSED
J12-3	UNUSED	UNUSED	UNUSED
J12-4	UNUSED	UNUSED	UNUSED
J12-5	UNUSED	UNUSED	UNUSED
J12-6	UNUSED	UNUSED	UNUSED
	THERMISTOR CIRCUITS		
J13-1	UPPER CAB TH	SENSES TEMPERATURE	BLUE/ORANGE
J13-7	UPPER CAB TH	SENSES TEMPERATURE	BROWN
J13-2	UPPER EVAP TH	SENSES TEMPERATURE	BLUE/YELLOW
J13-8	UPPER EVAP TH	SENSES TEMPERATURE	BROWN
J13-3	LOWER CAB TH	SENSES TEMPERATURE	BLUE
J13-9	LOWER CAB TH	SENSES TEMPERATURE	BROWN
J13-4	LOWER EVAP TH	SENSES TEMPERATURE	BLUE/BLACK
J13-10	LOWER EVAP TH	SENSES TEMPERATURE	BROWN
J13-4	UNUSED	UNUSED	UNUSED
J13-11	UNUSED	UNUSED	UNUSED
J13-6	COND TH	SENSES TEMPERATURE	BLUE
J13-12	COND TH	SENSES TEMPERATURE	BROWN
	LOW VOLTAGE CIRCUITS		
J7-1	LED OUT	LED POWER	RED/GREEN
J7-2	LED GND	LED GROUND	BLACK/GREEN
J7-3	UNUSED	UNUSED	UNUSED
J7-4	WINE HEATER 1 PWR	WINE HEATER POWER	RED/BLACK
J7-5	WINE HEATER 1 GND	WINE HEATER RETURN	BLACK/WHITE
J7-6	UNUSED	UNUSED	UNUSED
J7-7	WINE HEATER 2 PWR	WINE HEATER POWER	RED/BLACK
J7-8	WINE HEATER 2 GND	WINE HEATER RETURN	BLACK/WHITE

CIRCUIT	DESCRIPTION	FUNCTION	WIRE COLOR
	LOW VOLTAGE CIRCUITS (CONT)		
J1-1	12V POWER	DC POWER SUPPLY POSITIVE	RED
J1-2	12V POWER	DC POWER SUPPLY POSITIVE	RED
J1-3	12V RETURN	DC POWER SUPPLY NEGATIVE	BLACK
J1-4	12V RETURN	DC POWER SUPPLY NEGATIVE	BLACK
J10-1	UNUSED	UNUSED	UNUSED
J10-2	UIM 12V	UIM POWER	BLACK
J10-3	CAN BUS	UIM CAN_H	BLACK
J10-4	CAN BUS	UIM CAN_L	BLACK
J10-5	UIM GND	UIM RETURN	BLACK
J11-1	DR SW	DOOR SWITCH INPUT	YELLOW
J11-2	SWITCH GND	SWITCH GROUND	BLACK/YELLOW
J11-3	UNUSED	UNUSED	UNUSED
J11-4	UNUSED	UNUSED	UNUSED
J15-1	STEPPER 1B	AIR DAMPER OUTPUT 1B	WHITE/BLACK
J15-2	STEPPER 1A	AIR DAMPER OUTPUT 1A	BLUE
J15-3	STEPPER 2A	AIR DAMPER OUTPUT 2A	RED
J15-4	STEPPER 2B	AIR DAMPER OUTPUT 2B	YELLOW
J15-5	UNUSED	UNUSED	UNUSED
J15-6	COMP 1 12V	VCC1 12V POWER	PINK
J15-7	COMP 1 PWM	VCC1 PWM	BROWN
J3-1	EFAN1 12V	EVAP FAN POWER	RED
J3-2	EFAN1 VS	VAR. SPEED CONTROL OUT	YELLOW
J3-3	EFAN1 TACH	TACH INPUT	BLUE
J3-4	EFAN1 GND	EVAP FAN RETURN	BLACK/RED
J3-5	EFAN2 12V	EVAP FAN POWER	RED/BROWN
J3-6	EFAN2 VS	VAR. SPEED CONTROL OUT	YELLOW/BROWN
J3-7	EVAN2 TACH	TACH INPUT	BLUE/BROWN
J3-8	EFAN2 GND	EVAP FAN RETURN	BLACK/RED
J3-9	CFAN 12V	COND FAN POWER	RED/YELLOW
J3-10	CFAN VS	VAR. SPEED CONTROL OUT	YELLOW/ORANGE
J3-11	CFAN TACH	TACH INPUT	BLUE/ORANGE
J13-12	CFAN GND	COND FAN RETURN	BLACK/YELLOW

DEU HIGH VOLTAGE WIRING

HIGH VOLTAGE WIRING DIAGRAM
MODELS: DEU2450R-RO, DEU2450B-BG
DEU2450R/ADA, DEUBG/ADA, DEU2450W-ADA
PART NUMBER: 9049910 REV. A

⚠ WARNING

- THIS WIRING INFORMATION IS PROVIDED FOR USE BY QUALIFIED SERVICE PERSONNEL ONLY.
- DISCONNECT APPLIANCE FROM ELECTRICAL SUPPLY BEFORE BEGINNING SERVICE.
- BE SURE ALL GROUNDING DEVICES ARE CONNECTED WHEN SERVICE IS COMPLETE.
- FAILURE TO OBSERVE THE ABOVE WARNINGS MAY RESULT IN SEVERE ELECTRICAL SHOCK.

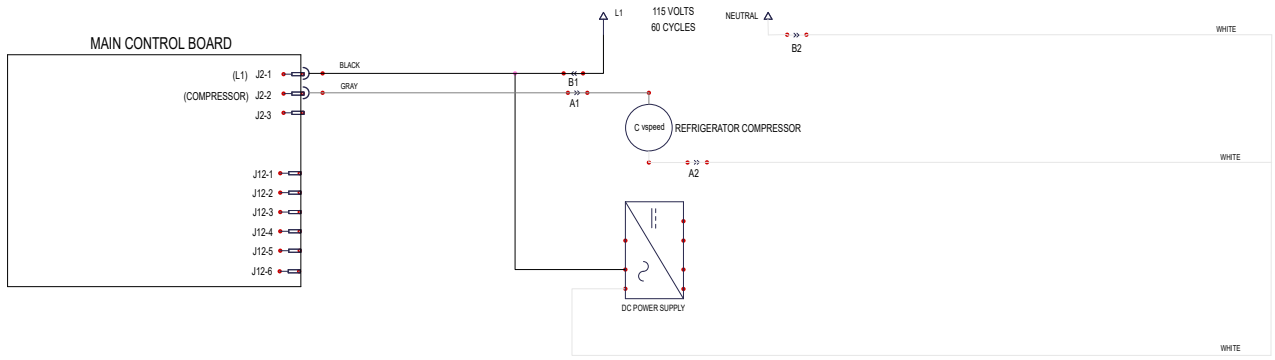

WIRING DIAGRAM
MODEL: DEU2450W
High Voltage
PART NUMBER 9036975 Rev A

⚠WARNING

- This wiring information is provided for use by qualified service personnel only.
- Disconnect appliance from electrical supply before begining service.
- Be sure all grounding devices are connected when service is complete.
- Failure to observe the above warnings may result in severe electrical shock.

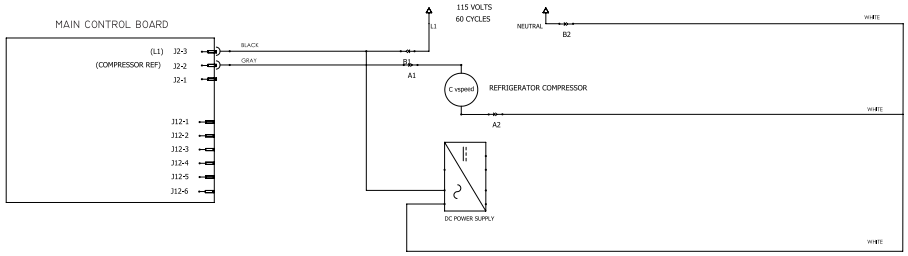

CIRCUIT	DESCRIPTION	FUNCTION	WIRE COLOR
	HIGH VOLTAGE CIRCUITS		
J2-1	UNUSED	UNUSED	UNUSED
J2-2	COMP	POWERS FZ COMPRESSOR	GRAY
J2-3	L1	L1	BLACK
J12-1	UNUSED	UNUSED	UNUSED
J12-2	UNUSED	UNUSED	UNUSED
J12-3	UNUSED	UNUSED	UNUSED
J12-4	UNUSED	UNUSED	UNUSED
J12-5	UNUSED	UNUSED	UNUSED
J12-6	UNUSED	UNUSED	UNUSED