MC24 Convection Microwave Service Manual

General Information 2
Controls & Operation 9
Troubleshooting Guide 15
Component Access & Removal 25
Wiring Diagrams 32

PRECAUTIONSTO BE OBSERVED BEFORE AND DURING SERVICING TO AVOID POSSIBLE EXPOSURE TO EXCESSIVE MICROWAVE ENERGY

(a) Do not operate or allow the oven to be operated with the door open.
(b) Make the following safety checks on all ovens to be serviced before activating the magnetron or other microwave source, and make repairs as necessary: (1) interlock operation, (2) proper door closing, (3) seal and sealing surfaces (arcing, wear, and other damage), (4) damage to or loosening of hinges and latches, (5) evidence of dropping or abuse.
(c) Before turning on microwave power for any service test or inspection within the microwave generating compartments, check the magnetron, wave guide or transmission line, and cavity for proper alignment, integrity, and connections.
(d) Any defective or misadjusted components in the interlock, monitor, door seal, and microwave generation and transmission systems shall be repaired, replaced, or adjusted by procedures described in this manual before the oven is released to the owner.
(e) A microwave leakage check to verify compliance with the Federal Performance Standard should be performed on each oven prior to release to the owner.

BEFORE SERVICING

Before servicing an operative unit, perform a microwave emission check as per the Microwave Measurement Procedure outlined in this service manual.
If microwave emissions level is in excess of the specified limit, contact WOLF immediately @ 1-800-332-9513.

If the unit operates with the door open, service person should 1) tell the user not to operate the oven and 2) contact WOLF and Food and Drug Administration's Center for Devices and Radiological Health immediately.

Service personnel should inform WOLF of any certified unit found with emissions in excess of 4mW/cm^2. The owner of the unit should be instructed not to use the unit until the oven has been brought into compliance.

DANGER CAUTION
HIGH VOLTAGE

Do not energize a microwave oven with the outer case cabinet removed, because a microwave oven generates High Voltage in the circuit.

If you intend to operate the oven employing the high frequency switching power converter circuit, you should take special precautions to avoid an electrical shock hazard.

The high voltage transformer, high voltage capacitor and high voltage diode have energized high voltage potential approx. 8 KV.

The aluminium heat sink is connected to the switching power transistor Collector pole, and has an energized high voltage potential approx. 650V peak.

DO NOT ACCESS THE HIGH VOLTAGE TRANSFORMER, HIGH VOLTAGE CAPACITOR, HIGH VOLTAGE DIODE AND HEAT SINK WHEN THE POWER SUPPLY IS CONNECTED TO AN ELECTRICAL OUTLET.

WARNING TO SERVICE PERSONNEL

Microwave ovens contain circuitry capable of producing very high voltage and current, contact with following parts may result in a severe, possibly fatal, electrical shock.

(Example)

High Voltage Capacitor, High Voltage Power Transformer, Magnetron, High Voltage Rectifier Assembly, High Voltage Harness etc..

Read the Service Manual carefully and follow all instructions.

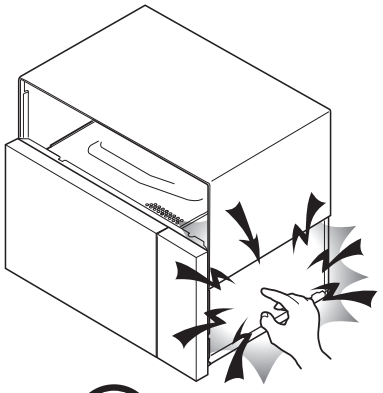

Don't Touch !
Danger High Voltage

Before Servicing

1. Disconnect the power supply cord, and then remove outer case.
2. Open the door and block it open.
3. Discharge high voltage capacitor.

WARNING: RISK OF ELECTRIC SHOCK. DISCHARGE THE HIGH-VOLTAGE CAPACITOR BEFORE SERVICING.

The high-voltage capacitor remains charged about 60 seconds after the oven has been switched off. Wait for 60 seconds and then short-circuit the connection of the high-voltage capacitor (that is the connecting lead of the high-voltage rectifier) against the chassis with the use of an insulated screwdriver.

Whenever troubleshooting is performed the power supply must be disconnected. It may in, some cases, be necessary to connect the power supply after the outer case has been removed, in this event,

1. Disconnect the power supply cord, and then remove outer case.
2. Open the door and block it open.
3. Discharge high voltage capacitor.
4. Disconnect the leads to the primary of the power transformer.
5. Ensure that the leads remain isolated from other components and oven chassis by using insulation tape.
6. After that procedure, reconnect the power supply cord.

When the testing is completed,

1. Disconnect the power supply cord, and then remove outer case.
2. Open the door and block it open.
3. Discharge high voltage capacitor.
4. Reconnect the leads to the primary of the power transformer.
5. Reinstall the outer case (cabinet).
6. Reconnect the power supply cord after the outer case is installed.
7. Run the oven and check all functions.

After repairing

1. Reconnect all leads removed from components during testing.
2. Reinstall the outer case (cabinet).
3. Reconnect the power supply cord after the outer case is installed.
4. Run the oven and check all functions.

Microwave ovens should not be run empty. To test for the presence of microwave energy within a cavity, place a cup of cold water on the oven turntable, close the door and set the power to HIGH and set the microwave timer for two (2) minutes. When the two minutes has elapsed (timer at zero) carefully check that the water is now hot. If the water remains cold carry out **Before Servicing** procedure and re-examine the connections to the component being tested.

When all service work is completed and the oven is fully assembled, the microwave power output should be checked and a microwave leakage test should be carried out.

MICROWAVE MEASUREMENT PROCEDURE (CANADA)

After adjustment of the door switches are completed individually or collectively, switch test and microwave leakage test must be performed with survey instrument and test result must be confirmed to meet the requirement of the performance standard
for microwave ovens as undermentioned.

A. Requirements:

Every microwave oven shall function in such a manner that when the oven is fully assembled and operating with its service controls and user controls adjusted to yield the maximum output, the leakage radiation, at all points at least 5 cm. from the external surface of the oven, does not exceed:

1) 1.0mW/cm^2 with the test load of 275 ± 15 ml of water at an initial temperature 20 ±5°C.
2) 5.0mW/cm^2 when the outer enclosure is removed with a test load of 275 ± 15 ml of water at an initial temperature 20±5°C.
3) 5.0mW/cm^2 without a test load.

B. Preparation for testing:
Before beginning the actual measurement of leakage, proceed as follows:
1) Make sure that the actual instrument is operating normally as specified in its instruction booklet.
Important:
Survey instruments that comply with the requirement for instrumentation as prescribed by CSA and NHW performance standard for microwave ovens must be used for testing recommended instruments are , NARDA 8100 and NARDA 8200.
2) Place the oven tray in the oven cavity.
3) Place the load of 275±15 ml of tap water initially at 20±5°C in the center of the oven cavity.
   The water container shall be a low form of 600 ml beaker with an inside diameter of approx. 8.5 cm (3-1/2 in.) and made of an electrically nonconductive material such as glass or plastic.
   The placing of this standard load in the oven is important not only to protect the oven, but also to insure that any leakage is measured accurately.
4) Set the cooking control on Full Power Cooking Mode, Close the door and select a cook cycle of several minutes. If the water begins to boil before the survey is completed, replace it with 275 ml of cool water.

C. Leakage test with enclosure installed :

1) Grasp the probe of the survey instrument and hold it perpendicular to the gap between the door and the body of the oven.
2) Move the probe slowly, not faster than 2.5 cm/sec. along the gap, watching for the maximum indication on the meter.
3) Check for leakage at the door screen, sheet metal seams and other accessible positions where the continuity of the metal has been breached (eg., around the switches, indicator, and vents).
   While testing for leakage around the door pull the door away from the front of the oven as far as is permitted by the closed latch assembly.
4) Measure carefully at the point of highest leakage and make sure that the highest leakage is no greater than 4mW/cm^2, and that the secondary interlock switch does turn the oven OFF before any door movement.

C. Leakage test without enclosure:

1) Remove the enclosure (cabinet).
2) Grasp the probe of the survey instrument and hold it perpendicular to all mechanical and electric parts of the oven that is accessible to the user of the oven including, but not limited to, the waveguide, cavity seams, magnetron gap between the door and the body of the oven.
3) Move the probe slowly, not faster than 2.5 cm/sec. along the gap, watching for the maximum indication on the meter.
4) Measure carefully at the point of highest leakage and make sure that the highest leakage is under 5mW/cm^2.

CAUTION: Special attention should be given to avoid electrical shock because HIGH VOLTAGE is generated during this test

No Load test
1) Operate the oven without a load and measure the leakage by the same method as the above test procedure " Leakage test with enclosure installed"
2. Make sure that the highest leakage should not exceed 5mW/cm^2.

NOTE: After servicing, record data on service invoice and microwave leakage report.

MICROWAVE MEASUREMENT PROCEDURE (USA)

A. Requirements:

1) Microwave leakage limit (Power density limit): The power density of microwave radiation emitted by a microwave oven should not exceed 1mW/cm^2 at any point 5cm or more from the external surface of the oven, measured prior to acquisition by a purchaser, and thereafter (through the useful life of the oven), 5 mW/cm^2 at any point 5cm or more from the external surface of the oven.
2) Safety interlock switches:
   Primary interlock relay switch shall prevent microwave radiation emission in excess of the requirement as above mentioned. Secondary interlock relay and door sensing switch shall prevent microwave radiation emission in excess of 5 mW/cm2 at any point 5cm or more from the external surface of the oven.

B. Preparation for testing:
Before beginning the actual measurement of leakage, proceed as follows:
1) Make sure that the actual instrument is operating normally as specified in its instruction booklet.

Important:
Survey instruments that comply with the requirement for instrumentation as prescribed by the performance standard for microwave ovens, 21 CFR 1030.10(c)(3)(i), must be used for testing.

2) Place the oven tray in the oven cavity.
3) Place the load of 275±15 ml (9.8 oz) of tap water initially at 20±5°C (68°F) in the center of the oven cavity.
   The water container shall be a low form of 600 ml (20 oz) beaker with an inside diameter of approx. 8.5 cm (3-1/2 in.) and made of an electrically nonconductive material such as glass or plastic.
   The placing of this standard load in the oven is important not only to protect the oven, but also to insure that any leakage is measured accurately.
4) Set the cooking control on Full Power Cooking Mode.
5) Close the door and select a cook cycle of several minutes. If the water begins to boil before the survey is completed, replace it with 275 ml of cool water.

C. Leakage test:

Closed-door leakage test (microwave measurement):
1) Grasp the probe of the survey instrument and hold it perpendicular to the gap between the door and the body of the oven.
2) Move the probe slowly, not faster than 1 in./sec. (2.5 cm/sec.) along the gap, watching for the maximum indication on the meter.
3) Check for leakage at the door screen, sheet metal seams and other accessible positions where the continuity of the metal has been breached (eg., around the switches, indicator, and vents).
   While testing for leakage around the door, pull the door away from the front of the oven as far as is permitted by the closed latch assembly.
4) Measure carefully at the point of highest leakage and make sure that the highest leakage is no greater than 4mW/cm^2, and that the primary interlock switch/secondary interlock relay does turn the oven OFF before any door movement.

NOTE: After servicing, record data on service invoice and microwave leakage report.

SERVICE MANUAL

MICROWAVE OVEN

MC24

This Manual has been prepared to provide Wolf Service Personnel with Operation and Service Information for the Wolf Microwave Oven, MC24.

It is recommended that service personnel carefully study the entire text of this manual so that they will be qualified to render satisfactory customer service.

Check the interlock switches and the door seal carefully. Special attention should be given to avoid electrical shock and microwave radiation hazard.

WARNING

Never operate the oven until the following points are ensured:
(A) The door is tightly closed.
(B) The door brackets and hinges are not defective.
(C) The door packing is not damaged.
(D) The door is not deformed or warped.
(E) There is no other visible damage with the oven.

Servicing and repair work must be carried out only by trained service personnel.

DANGER

Certain initial parts are intentionally not grounded and present a risk of electrical shock only during servicing. Service personnel - Do not contact the following parts while the appliance is energized; High Voltage Capacitor, Power Transformer, Magnetron, High Voltage Rectifier Assembly, High Voltage Harness; If provided, Vent Hood, Fan assembly, Cooling Fan Motor.

All the parts marked "*" on parts list are used at voltages more than 250V. Removal of the outer wrap gives access to voltage above 250V.

All the parts marked "Δ" on parts list may cause undue microwave exposure, by themselves, or when they are damaged, loosened or removed.

Wolf Appliance, Inc
P.O. Box 44988
Madison, WI 53744-4988
Customer Care: 800.332.9513

SPECIFICATION

ITEM	DESCRIPTION
Power Requirements	120 Volts (USA) / 117 Volts (Canadian) 13.0 Amperes (Microwave) / 13.0 Amperes (Convection) 60 Hertz / Single phase, 3 wire grounded
Power Output	900 watts (IEC 705 Test Procedure) Operating frequency of 2450MHz
Convection Power Output	1450 Watts
Case Dimensions	Width 24-5/8" Height 14-7/8" Depth 19-1/8"
Cooking Cavity Dimensions (1.5 Cubic Feet)	Width 16-1/8" Height 9-5/8" Depth 16-1/8"
Control Complement	Touch Control with Touch Glass Timer (0 - 99 min. 99 seconds) Microwave Power for Variable Cooking Repetition Rate; P-HI ..... Full power throughout the cooking time P-90..... approx. 90% of Full Power P-80..... approx. 80% of Full Power P-70..... approx. 70% of Full Power P-60..... approx. 60% of Full Power P-50..... approx. 50% of Full Power P-40..... approx. 40% of Full Power P-30 ..... approx. 30% of Full Power P-20..... approx. 20% of Full Power P-10..... approx. 10% of Full Power P-0..... No power throughout the cooking time Convection Temperature for Variable Cooking CONVECTION ..... 100 - 450°F Temp. control MICRO BAKE..... 350°F with 10% microwave power MICRO ROAST ..... 300°F with 30% microwave power SLOW COOK .....300°F for 4 hours Reheat, Add Minute, Popcorn, Auto Defrost, Convec, Micro Roast, Micro Bake, Number and temperature selections, Timer, Clock, Stop/Clear, Power Level, Start / Quick On, Settings, Keep warm, Wolf Gourmet
Oven Cavity Light	Yes
Safety Standard	UL Listed FCC Authorized DHHS Rules, CFR, Title 21, Chapter 1, Subchapter J Canadian Standards Association. Health CANADA, Industry CANADA.

GENERAL INFORMATION

GROUNDING INSTRUCTIONS

This oven is equipped with a three prong grounding plug. It must be plugged into a wall receptacle that is properly installed and grounded.
In the event of an electrical short circuit, grounding reduces the risk of electric shock by providing an escape wire for the electric current.
WARNING: Improper use of the grounding plug can result in a risk of electric shock.

Electrical Requirements

The electrical requirements are a 115 -120 volt 60 Hz, AC only, 15 or more amp. fused electrical supply. It is recommended that a separate circuit serving only this appliance be provided. When installing this appliance, observe all applicable codes and ordinances.

A short power-supply cord is provided to reduce risks of becoming entangled in or tripping over a longer cord.

Where a two-pronged wall-receptacle is encountered, it is the personal responsibility and obligation of the customer to contact a qualified electrician and have it replaced with a properly grounded three-pronged wall receptacle or have a grounding adapter properly grounded and polarized. If an extension cord must be used, it should be a 3-wire, 15 amp. or more cord. Do not drape over a countertop or table where it can be pulled on by children or tripped over accidentally.

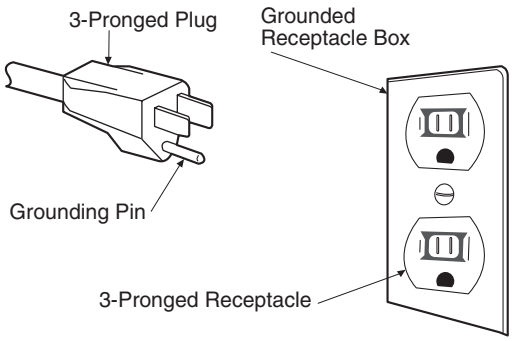

CAUTION: DO NOT UNDER ANY CIRCUMSTANCES CUT OR REMOVE THE ROUND GROUNDING PRONG FROM THIS PLUG.

OVEN DIAGRAM

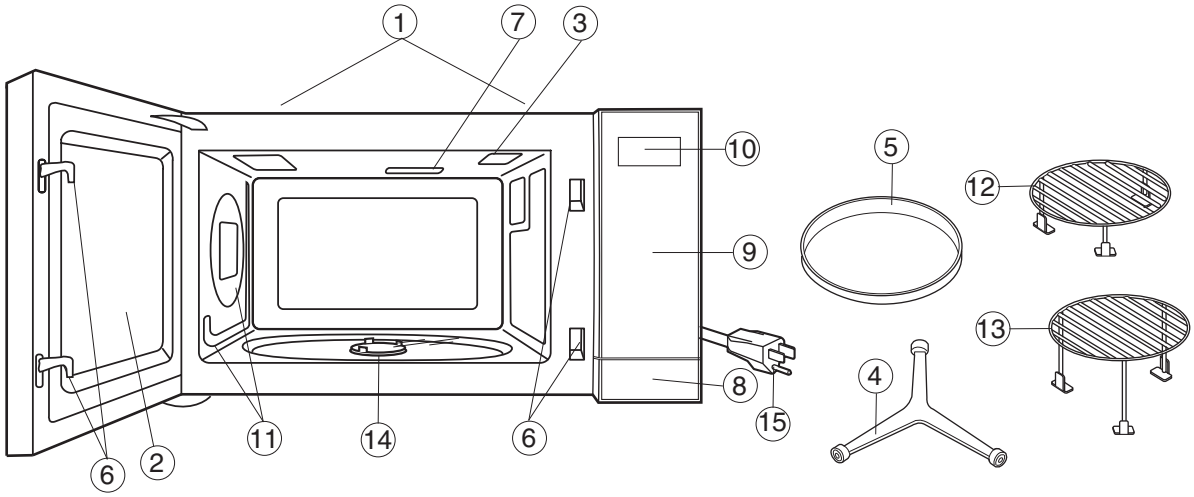

1. Ventilation openings. (Rear side)
2. Oven door with see-through window.
3. Oven lamp.
4. Turntable support.
5. Removable turntable.
   The turntable will rotate clockwise or counterclockwise.
6. Safety door latches.
   The oven will not operate unless the door is securely closed.
7. Wave guide cover.
8. Door open button.
9. Glass-Touch control panel.
10. Lighted digital display.
11. Convection air openings.
12. Removable low rack.
13. Removable low rack. (Baking rack)
14. Turntable motor shaft.
15. Power supply cord.

TOUCH CONTROL PANEL



OPERATION

DESCRIPTION OF OPERATING SEQUENCE

The following is a description of component functions during oven operation.

OFF CONDITION

Closing the door activates the door sensing switch and secondary interlock switch. (In this condition, the monitor switch contacts are opened.)
When oven is plugged in, 117 volts A.C. is supplied to the control unit. (Figure O-1).

1. The display will show "WELCOME TOUCH CLEAR AND TOUCH CLOCK TO SET TIME"
   To set any program or set the clock, you must first touch the STOP/CLEAR pad. The display will clear, and " : " will appear.

NOTE: When the door is opened, the oven lamp comes on.

2. A signal is input to the control unit, energizing the coil of shut-off relay (RY-4). RY4 contacts close, completing a circuit to the damper motor. The damper motor now operates moving the damper to the open position, thereby closing the contacts of the damper switch inputs a signal to the control unit. The coil of relay RY-4 is de-energized, opening its contacts, thereby turning off the damper motor.

COOKING CONDITION

For Microwave cooking, first program the power level by touching the POWER LEVEL pad then a number pad. (Touch POWER LEVEL pad twice to choose high.) Then you can enter the cooking time by touching the number pads.
For Convection cooking,touch a number pad to choose temperature for preheat and cooking.
For either cooking method, when START pad is touched, the following operations occur:

1. The contacts of relays are closed and components connected to the relays are turned on as follows.
   (For details, refer to Figure O-2)

RELAY	CONNECTED COMPONENTS
RY-1	Oven lamp/Turntable motor
RY-2	Power transformer
RY-3	Heating element
RY-4	Damper motor
RY-5	Convevtion motor
RY-6	Fan motor

2. 117 volts A.C. is supplied to the primary winding of the power transformer and is converted to about 3 volts A.C. output on the filament winding, and approximately 2360 volts A.C. on the high voltage winding.
3. The filament winding voltage heats the magnetron filament and the H.V. winding voltage is sent to a voltage doubler circuit.
4. The microwave energy produced by the magnetron is channelled through the waveguide into the cavity feedbox, and then into the cavity where the food is placed to be cooked.
5. Upon completion of the cooking time, the power transformer, oven lamp, etc. are turned off, and the generation of microwave energy is stopped. The oven will revert to the OFF condition.
6. When the door is opened during a cook cycle, third door switch, monitor switch, door sensing switch, the secondary interlock relay and the primary interlock switch are activated with the following results. The circuits to the turntable motor, the cooling fan motor, and the high voltage components are de-energized, the oven lamp remains on, and the digital read-out displays the time still remaining in the cook cycle when the door was opened.
7. The monitor switch is electrically monitoring the operation of the relay (RY1) and the primary interlock switch and is mechanically associated with the door so that it will function in the following sequence.

(1) When the door opens from a closed position, the door sensing switch and the primary interlock switch open their contacts, and then the monitor switch contacts close and then the third door switch contacts open.
(2) When the door is closed from the open position, the monitor switch contacts open and the third door switch contacts close first, and then the contacts of the primary interlock switch and the door sensing switch close.

If the relay (RY1) and the primary interlock switch fail with their contacts closed when the door is opened, the closing of the monitor switch contacts will form a short circuit through the monitor fuse, the relay (RY1) and the primary interlock switch, causing the monitor fuse to blow.

POWER LEVEL P-0 TO P-90 COOKING

When Variable Cooking Power is programmed, the 117 volts A.C. is supplied to the power transformer intermittently through the contacts of relay (RY-2). RY-2 is operated by the control unit within an varying time base. Microwave power operation is as follows:

VARI-MODE	ON TIME	OFF TIME
Power 10(P-HI) (100% power)	32 sec.	0 sec.
Power 9(P-90) (approx. 90% power)	30 sec.	2 sec.
Power 8(P-80) (approx. 80% power)	26 sec.	6 sec.
Power 7(P-70) (approx. 70% power)	24 sec.	8 sec.
Power 6(P-60) (approx. 60% power)	22 sec.	10 sec.
Power 5(P-50) (approx. 50% power)	18 sec.	14 sec.
Power 4(P-40) (approx. 40% power)	16 sec.	16 sec.
Power 3(P-30) (approx. 30% power)	12 sec.	20 sec.
Power 2(P-20) (approx. 20% power)	8 sec.	24 sec.
Power 1(P-10) (approx. 10% power)	6 sec.	26 sec.
Power 0(P-0) (0% power)	0 sec.	32 sec.

Note: The ON/OFF time ratio does not correspond with the percentage of microwave power, because approx. 2 seconds are needed for heating of the magnetron filament.

CONVECTION COOKING CONDITION

PREHEATING CONDITION

Program desired convection temperature by touching the CONVECTION pad and the Temperature pad.
When the START pad is touched, the following operations occur:

1. The coil of shut-off relays (RY1, RY3,RY5 and RY6) are energized, the oven lamp, cooling fan motor, turntable motor and convection motor are turned on.
2. The coil of relay (RY4) is energized by the control unit. The damper is moved to the closed position, opening the damper switch contacts. The opening of the damper switch contacts sends a signal to the LSI on the control unit de-energizing the relay (RY4) and opening the circuit to the damper motor.
3. The coil of heater relay (RY3) is energized by the control unit and the main supply voltage is applied to the heating element.
4. When the oven temperature reaches the selected preheat temperature, the following operations occur:
   4-1 The heater relay is de-energized by the control unit temperature circuit and thermistor, opening the circuit to the heating element.
   4-2. The oven will continue to function for 30 minutes, turning the heater on and off, as needed to maintain the selected preheat temperature. The oven will shut-down completely after 30 minutes

CONVECTION COOKING CONDITION

When the preheat temperature is reached, a beep signal will sound indicating that the holding temperature has been reached in the oven cavity. Open the door and place the food to be cooked in the oven. Program desired cooking time by touching the number pads. When the START pad is touched, the following operations occur:

1. The numbers on the digital read-out start to count down to zero.
2. The oven lamp, turntable motor, cooling fan motor and convection motor are energized.
3. Heater relay (RY3) is energized (if the cavity temperature is lower than the selected temperature) and the main supply voltage is applied to the heating element to return to the selected cooking temperature.
4. Upon completion of the cooking time, the audible signal will sound, and oven lamp, turntable motor, cooling fan motor and convection motor are de-energized. At the end of the convection cycle, if the cavity air temperature is above 275°F, the circuit to RY6 will be maintained (by the thermistor circuit) to continue operation of the cooling fan motor until the temperature drops below 245°F, at which time the relay will be de-energized, turning off the fan motor. Relay RY5 will however, open as soon as the convection cycle has ended, turning off the convection fan motor.
5. At the end of the convection cook cycle, shut-off relay (RY4) is energized turning on the damper motor. The damper is returned to the open position, closing the damper switch contacts which send a signal to the control unit, de-energizing shut-off relay (RY4).

AUTOMATIC MIX COOKING CONDITION

The Micro Roast pad (aka HIGH MIX/ROAST) is preprogrammed for 325°F with 10% microwave power, while the Micro Bake pad (aka LOW MIX/BAKE) is preprogrammed for 300°F with 30% microwave power.

Touch the MICRO ROAST or MICRO BAKE then touch START to preheat (Touch same pad twice to change default convection temperature.) Oven reaches preheating conditions.. Open the door and place the food to be cooked in the oven. Program desired cooking time by touching the number pads. When the START pad is touched, the following operations occur:

1. The power supply voltage is alternated to the heating element and power transformer.
2. The heating element operates through the heater relay (RY3) contacts and the power transformer operates through the primary interlock relay (RY2) contacts.
3. These are operated by the control unit to supply alternately within a 32 second time base, convection heat and microwave energy.

The relationship between the convection and microwave power operations are as follows.

Note: The ON and OFF time ratio does not correspond with the percentage of microwave power, because approx. 2 seconds are needed for heating of the magnetron filament.

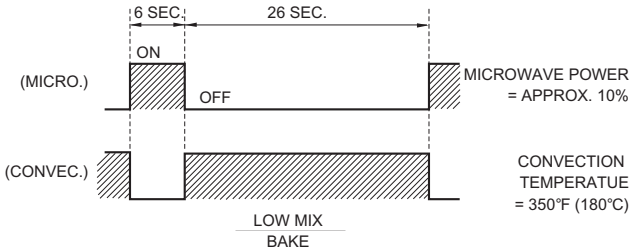

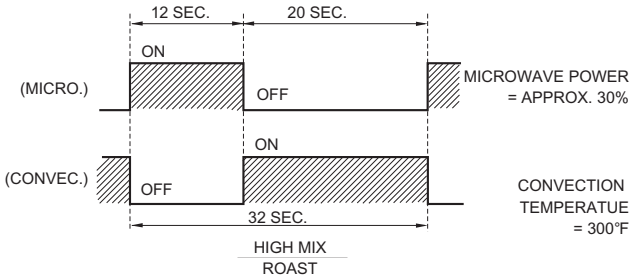

Note: During alternate Microwave/Convection operation, the convection heater is energized only if the cavity temperature drops below the set temperature.

SENSOR COOKING CONDITION

Using the SENSOR COOK function, the foods are cooked without figuring time, power level or quantity. When the oven senses enough steam from the food, it relays the information to its microprocessor which will calculate the remaining cooking time and power level needed for best results.
When the food is cooked, water vapor is developed.
The sensor "senses" the vapor and its resistance increases gradually. When the resistance reaches the value set according to the menu, supplementary cooking is started.
The time of supplementary cooking is determined by experiment with each food category and inputted into the LSI.
An example of how sensor works:

1. Potatoes at room temperature. Vapor is emitted very slowly.



2. Heat potatoes. Moisture and humidity is emitted rapidly. You can smell the aroma as it cooks.

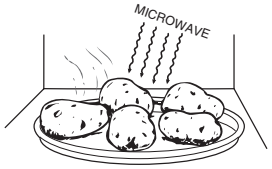

3. Sensor detects moisture and humidity and calculates cooking time and variable power.

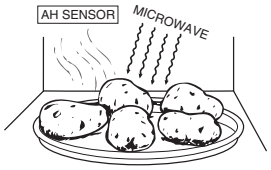

Cooking Sequence.

1. Touch SENSOR COOK pad.
   NOTE: The oven should not be operated on SENSOR COOK immediately after plugging in the unit. Wait two minutes before cooking on SENSOR COOK.
2. Select desired Sensor setting.
3. Touch START pad.
   The coil of shut-off relay (RY1, RY6) is energized, the oven lamp and cooling fan motor are turned on, but the power transformer is not turned on.
4. After about 16 seconds, the cook relay (RY-2) is energized. The power transformer is turned on, microwave energy is produced and first stage is started. The 16 seconds is the cooling time required to remove any vapor from the oven cavity and sensor.

NOTE: During this first stage, do not open the door or touch STOP/CLEAR pad.

5. When the sensor detects the vapor emitted from the food, the display switches over to the remaining cooking time and the timer counts down to zero. At this time, the door may be opened to stir food, turn it or season, etc.
6. When the timer reaches zero, an audible signal sounds. The shut-off relay and cook relay are de-energized and the power transformer, oven lamp, etc. are turned off.
7. Opening the door or touching the STOP/CLEAR pad, the time of day will reappear on the display and the oven will revert to an OFF condition.

AUTO DEFROST COOKING

The AUTO DEFROST key is a special function key to defrost meats and poultry faster and better. AUTO DEFROST automatically defrosts roast beef, etc.. When the AUTO DEFROST is selected and the food weight is entered by using the AUTO DEFROST pad, the oven will cook according to the special cooking sequence.

FIRE SENSING FEATURE (MICROWAVE MODE)

This model incorporates a sensing feature which will stop the oven's operation if there is a fire in the oven cavity during microwave cooking.
This is accomplished by the LSI repeatedly measuring the voltage across the temperature measurement circuit (thermistor) during it's 32-seconds time base comparing the obtained voltage measurements. If the most recent voltage measured is 300mV greater than the previous voltage measured, the LSI judges it as a fire in the oven cavity and switches off the relays to the power transformer, fan motor and convection motor. The LSI also stops counting down and closes the damper door so that no fresh air will enter the oven cavity. Please refer to the following section for a more detailed description.

Operation

Please refer to the timing diagrams below.

1. The thermistor operates within a 32-seconds time base and it is energized for three (3) seconds and off for 29 seconds. Two (2) seconds after the thermistor is energized, the voltage across the temperature measurement circuit is sampled by the LSI and twenty one (21) seconds after the thermistor is cut off the LSI turns on the cooling fan for six (6) seconds.
2. The above procedure is repeated. If the difference between the first voltage measured (in step 1) and the voltage measured when the procedure is repeated (step 2) is greater than 300mV the LSI makes the judgment that there is a fire in the oven cavity and will switch off the relays to the power transformer, fan motor and convection motor. The LSI also stops counting down and closes the damper door so that no fresh air will enter the oven cavity.
3. Once the fire sensor feature has shut the unit down, the programmed cooking cycle may be resumed by pressing the "START" pad or the unit may be reset by pressing the "CLEAR" pad.

IMPORTANT:
During sensor cooking operation, the fire sensing operation sequence will not begin until the AH sensor has detected vapors and initiated a sensor cooking cycle. This is because the operation of the convection fan would interfere with the AH sensor's vapor detection.

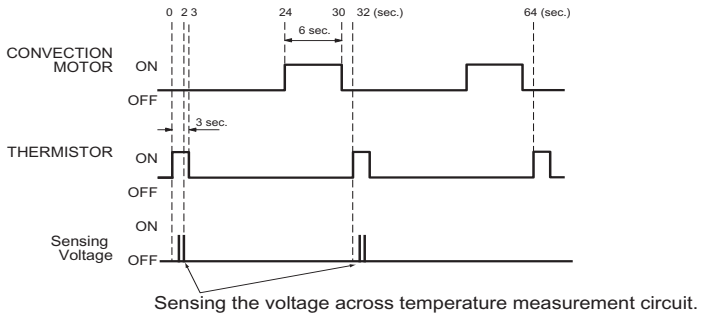

SCHEMATIC DIAGRAM

SCHEMATIC
NOTE: CONDITION OF OVEN
1. DOOR CLOSED.
2. CLOCK APPEARS ON DISPLAY.

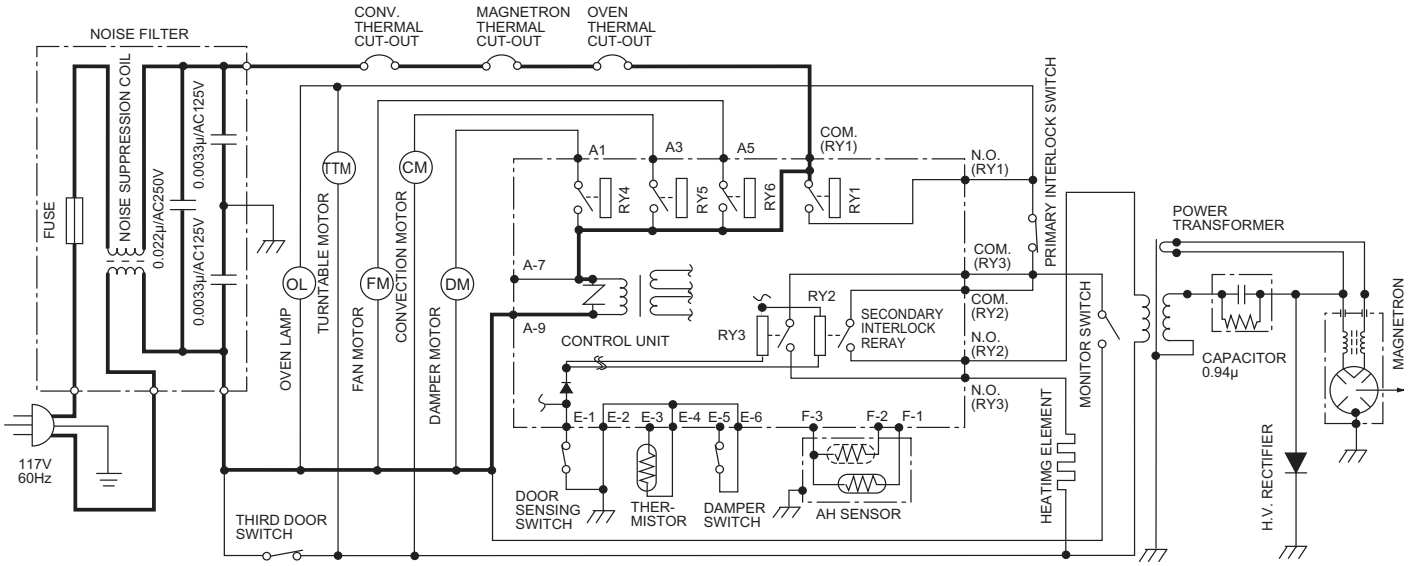

Figure O-1. Oven Schematic-OFF Condition

SCHEMATIC
NOTE: CONDITION OF OVEN
1. DOOR CLOSED.
2. COOKING TIME PROGRAMMED.
3. “START” PAD TOUCHED.

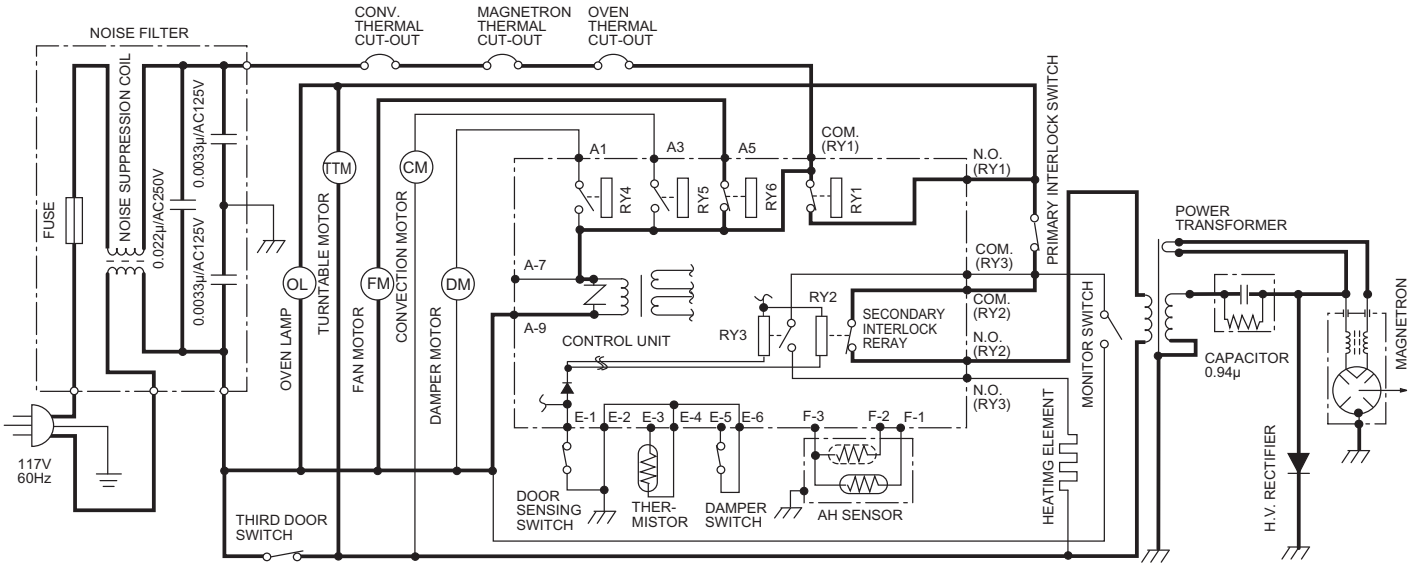

Figure O-2. Oven Schematic-Microwave Cooking Condition

SCHEMATIC

NOTE: CONDITION OF OVEN
1. DOOR CLOSED.
2. MIX COOKING PAD TOUCHED.
3. COOKING TIME PROGRAMMED.
4. “START” PAD TOUCHED.
5. RY2 AND RY3 WILL ALTERNATELY CLOSE. DURING COOK CYCLE.

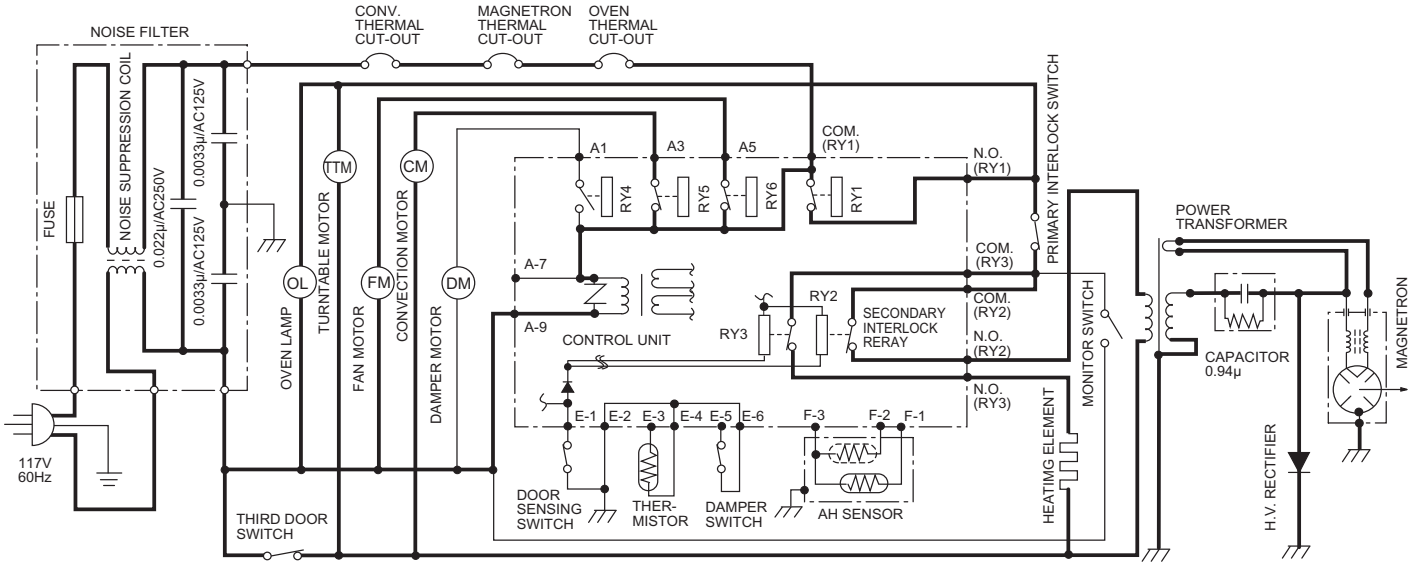

Figure O-3. Oven Schematic-Automatic Mix Cooking Condition

SCHEMATIC

NOTE: CONDITION OF OVEN
1. DOOR CLOSED.
2. CONVECTION PAD TOUCHED.
3. DESIRED TEMP. TOUCHED.
4. COOKING TIME PROGRAMMED.
5. “START” PAD TOUCHED.

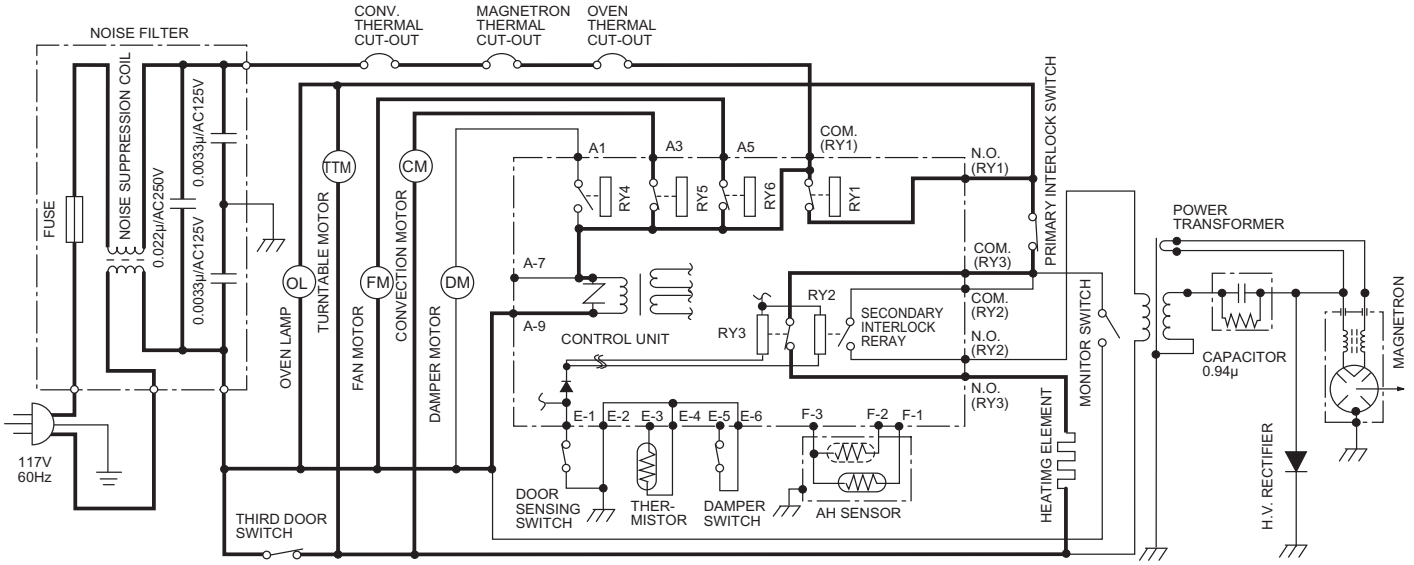

Figure O-4. Oven Schematic-Convection Cooking Condition

DESCRIPTION AND FUNCTION OF COMPONENTS

DOOR SENSING AND PRIMARY INTERLOCK SWITCHES

The door sensing switch in the secondary interlock system is mounted in the upper position on the latch hook, the primary interlock switch is mounted in the lower position on the latch hook. They are activated by the latch heads on the door. When the door is opened, the switches interrupt the circuit to all components. A cook cycle cannot take place until the door is firmly closed thereby activating both interlock switches. The secondary interlock system consists of the door sensing switch and secondary interlock relay located on the control circuit board.

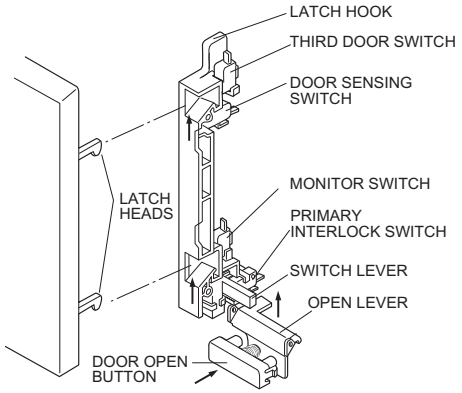

Figure D-1. Door sensing switch, monitor switch, third door switch and primary interlock switch

MONITOR SWITCH

The monitor switch is mounted on the middle position of latch hook. It is activated (the contacts opened) by the lower latch head while the door is closed. The switch is intended to render the oven inoperative by means of blowing the monitor fuse when the contacts of the relay RY1 and primary interlock switch fail to open when the door is opened.

Functions:

1. When the door is opened, the monitor switch contact close (to the ON condition) due to their being normally closed. At this time the door sensing and primary interlock and third door switches are in the OFF condition (contacts open) due to their being normally open contact switches.
2. As the door goes to a closed position, the monitor switch contacts are first opened and then the door sensing switch, third door switch and the primary interlock switch contacts close. (On opening the door, each of these switches operate inversely.)
3. If the door is opened, and the relay RY1 and the primary interlock switch contacts fail to open, the monitor fuse blows simultaneously with closing of the monitor switch contacts.

CAUTION: BEFORE REPLACING A BLOWN MONITOR FUSE TEST THE DOOR SENSING SWITCH, PRIMARY INTERLOCK SWITCH, RELAY(RY1) AND MONITOR SWITCH FOR PROPER OPERATION. (REFER TO CHAPTER "TEST PROCEDURE").

NOTE: MONITOR FUSE AND MONITOR SWITCH ARE REPLACED AS AN ASSEMBLY.

THIRD DOOR SWITCH

The switch is activated by the latch heads, while the door is closed. When the door is opened, the switch interrupt the circuit to the power transformer. This switch prevents power transformer engaging and microwave when the door opened.

THERMISTOR

The thermistor is a negative temperature coefficient type. The temperature in the oven cavity is detected through the resistance of the thermistor, and then the control unit causes the heater relay to operate, thus the current to the heating element is turned ON/OFF.

MAGNETRON THERMAL CUT-OUT

The thermal cut-out located on the waveguide is designed to prevent damage to the magnetron if an over heated condition develops in the magnetron due to cooling fan failure, obstructed air guide, dirty or blocked air intake, etc.
Under normal operation, the thermal cut-out remains closed. However, when abnormally high temperatures are reached within the magnetron, the thermal cut-out will open at 257°F (125°C) causing the oven to shut down. magnetron thermal cut-out is not reset at room temperature.

OVEN THERMAL CUT-OUT

The thermal cut-out located on the side of the steam duct is designed to prevent damage to the unit if the foods in the oven catch fire due to over heating produced by improper setting of cooking time or failure of control unit.
Under normal operation, the thermal cut-out remains closed. However, when abnormally high temperatures are reached within the oven cavity, the thermal cut-out will open at 302°F (150°C) causing the oven to shut down.
When the thermal cut-out has cooled, the thermal cut-out closes at 266°F (130°C)

CONV. THERMAL CUT-OUT

The thermal cut-out located on the left side of the thermal protection plate (left) is designed to prevent damage to the heater unit if an over heated condition develops in the tube due to cooling fan failure, obstructed air ducts, dirty or blocked air intake, etc.
Under normal operation, the thermal cut-out remains closed. However, when abnormally high temperatures are reached within the heater unit, the thermal cut-out will open at 302°F (150°C) causing the oven to shut down.
When the thermal cut-out has cooled, the thermal cut-out closes at 266°F (130°C)

HEATING ELEMENT

The heating element is located at the left side of the oven cavity. It is intended to heat air driven by the convection fan. The heated air is kept in the oven and force-circulated and reheated by the heating element.

CONVECTION COOKING SYSTEM

This oven is designed with a hot air heating system where food is not directly heated by the heating element, but is heated by forced circulation of the hot air produced by the heating element.
The air heated by the heating element is circulated through the convection passage provided on the outer casing of the

oven cavity by means of the convection fan which is driven by the convection motor. It then enters the inside of the oven through the vent holes provided on the left side of the oven. Next, the hot air heats the food on the turntable and leaves the oven cavity through the vent in the center of the oven cavity left side wall.
Without leaving the oven, this hot air is reheated by the heating element, passes through the convection passage and enters the inside of the oven cavity again, in a continuing cycle.
In this way, the hot air circulates inside the oven cavity to raise its temperature and, at the same time, comes into contact with the food being cooked.
When the temperature inside the oven cavity reaches the selected temperature, the heating element is de-energized.
When the temperature inside the oven cavity drops below the selected temperature, the heating element is energized again. In this way, the inside of the oven cavity is maintained at approximately the selected temperature.
When the convection time reaches 0, the heating element is de-energized and the convection fan stops operating and the oven shuts off.

DAMPER OPEN-CLOSE MECHANISM

Usually, the damper is in the open position except during convection cooking. Damper position is set automatically by damper motor, damper switch, motor cam and damper shaft. These components are operated by a signal that judges if microwave cooking or convection cooking operation is selected by the control unit.

Microwave Cooking:
Damper is in the open position, because a portion of cooling air is channelled through the cavity to remove steam and vapors given off from the heating foods.
It is then exhausted at the top of the oven cavity into a condensation compartment.
Convection Cooking:
Damper is in the closed position, so that no hot air will be allowed to leak out the oven cavity.

Damper Operation
1. When power supply cord is plugged in:
   1-1. When power supply cord is plugged in, a signal is sensed in the control unit, and operates shut-off relay (RY4).
   1-2. Contacts of shut-off relay (RY4) close, the damper motor is energized, opening the damper door.
   1-3. When the damper is moved to the open position by the damper cam the damper switch is closed (ON position).
   1-4. The signal from damper switch is re-sensed in the control unit and shut-off relay (RY4) is turned off.
   1-5. The 120 volts A.C. to the damper motor is removed and the motor turns off.
2. When oven is microwave cooking:
   Damper is in the open position.
3. When oven is convection cooking:
   3-1. Damper motor is energized by touching the convection, temperature and START pads.
   3-2. When damper is in the closed position (damper switch is OFF), its signal is sensed by the control unit, and shut-off relay (RY4) is de-energized.
   3-3. The damper is held in the closed position during the convection cooking operation.
   3-4. At the end of the convection cooking, shut-off relay (RY4) is energized, and the damper is returned to the open position.

NOTE: If the damper door is not in the proper position, closed during convection or open during microwave, the control unit will stop oven operation after 1 minute.

Figure D-2. Damper Mechanism

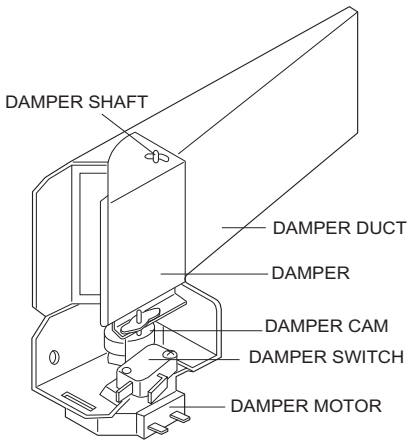

TROUBLESHOOTING GUIDE

When troubleshooting the microwave oven, it is helpful to follow the Sequence of Operation in performing the checks. Many of the possible causes of trouble will require that a specific test be performed. These tests are given a procedure letter which will be found in the “Test Procedure”section.

IMPORTANT: If the oven becomes inoperative because of a blown monitor fuse, check the monitor switch, relay (RY1), door sensing switch and primary interlock switch before replacing the monitor fuse. If monitor fuse is replaced, the mintor switch must also be replaced at the same time. Use part FFS-BA012WRK0 as an assembly.

TEST PROCEDURE	CONDITION / PROBLEM / POSSIBLE CAUSE AND DEFECTIVE PARTS	OFF CONDITION					COOKING CONDITION				(MICROWAVE)					(CONVECTION)						(SENSOR COOKING)
		Home fuse blows when power cord is plugged into wall receptacle.	Monitor fuse blows when power cord is plugged into wall receptacle	88:88 does not appear in display when power cord is first plugged into wall receptacle.	Display does not operate properly when STOP/CLEAR pad is touched. (The time of day should appear on the display with beep sound.)	Oven lamp does not light with door opened.	Oven lamp does not light in cook cycle. (It light when door is opened).	Cooking cycle runs 1 minute then shuts down.	Oven lamp light, but turntable motor does not operate.	Turntable motor operates normally but cooling fan motor does not operate.	Oven does not go into a cook cycle, when START pad is touched.	Low or no power is produced during microwave cooking (The food is heated incompletely or not heated at all)	Extremely uneven heating is produced in oven load (food).	Function of variable cooking does not operate properly except HIGH power.	Function of AUTO DEFROST does not operate properly.	CONV indicator lights, but oven does not go into cook cycle when START pad is touched.	CONV indicator lights, but heating element does not heat.	Temperature in the oven cavity is lower or higher than preset.	Cooling fan motor runs intermittently or all the time.	Convection cycle runs 4 minutes and 15 seconds then shuts down.	Oven in the sensor cooking condition but AH sensor does not end or AH sensor turns off about max. 30 min. after start.
A	MAGNETRON											○									
B	POWER TRANSFORMER											○									
C	H.V. RECTIFIER ASSEMBLY											○									
D	HIGH VOLTAGE CAPACITOR											○									
E	PRIMARY INTERLOCK SWITCH										○	○				○	○				
F	SECONDARY INTERLOCK SYSTEM				○	○					○										
G	MONITOR SWITCH		○																		
H	MONITOR FUSE			○																	
I	OVEN THERMAL CUT-OUT								○		○					○	○				
I	CONVECTION CUT-OUT			○																	
J	CONVECTION HEATER															○	○	○			
K	THERMISTOR																	○	○	○	
L	DAMPER MOTOR							○													
M	DAMPER SWITCH							○													
N	TOUCH CONTROL PANEL		○	○	○	○	○	○		○	○	○		○	○	○	○	○	○	○	○
O	NOISE FILTER		○	○																	
P	RELAY RY-1		○			○	○									○	○			○	
P	RELAY RY-2											○		○							
P	RELAY RY-3															○	○	○		○	
P	RELAY RY-4							○													
P	RELAY RY-5																	○			
P	RELAY RY-6									○									○		
Q	AUTO DEFROST														○						
Replace	OVEN LAMP OR SOCKET					○															
Replace	FAN MOTOR									○									○		
Replace	TURNTABLE MOTOR								○				○								
Replace	CONVECTION MOTOR																	○			
Check	LOOSE WIRING		○	○	○	○		○	○	○	○	○	○			○	○	○	○	○	○
Check	SHORTED IN POWER CORD	○		○																	
Check	NO POWER AT OUTLET			○																	
Check	LOW VOLTAGE																	○			
R	AH SENSOR																				○

TEST PROCEDURES

PROCEDURE LETTER	COMPONENT TEST
A	**MAGNETRON ASSEMBLY TEST**

HIGH VOLTAGES ARE PRESENT DURING THE COOK CYCLE, SO EXTREME CAUTION SHOULD BE OBSERVED.

DISCHARGE THE HIGH VOLTAGE CAPACITOR BEFORE TOUCHING ANY OVEN COMPONENTS OR WIRING.

To test for an open filament, isolate the magnetron from the high voltage circuit. A continuity check across the magnetron filament leads should indicate less than 1 ohm.

To test for a shorted magnetron, connect the ohmmeter leads between the magnetron filament leads and chassis ground. This test should indicate an infinite resistance. If there is little or no resistance the magnetron is grounded and must be replaced.

Power output of the magnetron can be measured by performing a water temperature rise test. This test should only be used if above tests do not indicate a faulty magnetron and there is no defect in the following components or wiring: silicon rectifier, high voltage capacitor and power transformer. This test will require a 16 ounce (453cc) measuring cup and an accurate mercury thermometer or thermocouple type temperature tester. For accurate results, the following procedure must be followed carefully:

1. Fill the measuring cup with 16 oz. (453cc) of tap water and measure the temperature of the water with a thermometer or thermocouple temperature tester. Stir the thermometer or thermocouple through the water until the temperature stabilizes. Record the temperature of the water.
2. Place the cup of water in the oven. Operate oven at POWER HI(HIGH) selecting more than 60 seconds cook time. Allow the water to heat for 60 seconds, measuring with a stop watch, second hand of a watch or the digital read-out countdown.
3. Remove the cup from the oven and again measure the temperature, making sure to stir the thermometer or thermocouple through the water until the maximum temperature is recorded.
4. Subtract the cold water temperature from the hot water temperature. The normal result should be 22 to 43°F(12.2 to 23.8°C) rise in temperature. If the water temperatures are accurately measured and tested for the required time period the test results will indicate if the magnetron tube has low power output (low rise in water temperature) which would extend cooking time or high power output (high rise in water temperature) which would reduce cooking time. Because cooking time can be adjusted to compensate for power output, the magnetron tube assembly should be replaced only if the water temperature rise test indicates a power output well beyond the normal limits. The test is only accurate if the power supply line voltage is 117 volts and the oven cavity is clean.

B	**POWER TRANSFORMER TEST**

DISCHARGE THE HIGH VOLTAGE CAPACITOR BEFORE TOUCHING ANY OVEN COMPONENTS OR WIRING.

Disconnect the primary input terminals and measure the resistance of the transformer with an ohmmeter. Check for continuity of the coils with an ohmmeter. On the R x 1 scale, the resistance of the primary coil should be less than 1 ohm and the resistance of the high voltage coil should be approximately 84.4 ohms; the resistance of the filament coil should be less than 1 ohm.

(HIGH VOLTAGES ARE PRESENT AT THE HIGH VOLTAGE TERMINAL, SO DO NOT ATTEMPT TO MEASURE THE FILAMENT AND HIGH VOLTAGE.)

C	**HIGH VOLTAGE RECTIFIER TEST**

DISCHARGE THE HIGH VOLTAGE CAPACITOR BEFORE TOUCHING ANY OVEN COMPONENTS OR WIRING.

Isolate the rectifier from the circuit. Using the highest ohm scale of the meter, read the resistance across the terminals and observe, reverse the leads to the rectifier terminals and observe meter reading. If a short is indicated in both directions, or if an infinite resistance is read in both directions, the rectifier is probably defective and should be replaced.

D	**HIGH VOLTAGE CAPACITOR TEST**

DISCHARGE THE HIGH VOLTAGE CAPACITOR BEFORE TOUCHING ANY OVEN COMPONENTS OR WIRING.

TEST PROCEDURES

PROCEDURE LETTER	COMPONENT TEST

If the capacitor is open, no high voltage will be available to the magnetron. Disconnect input leads and check for short or open between the terminals using an ohmmeter.
Checking with a high ohm scale, if the high voltage capacitor is normal, the meter will indicate continuity for a short time and should indicate approximately 10 MΩ once the capacitor is charged. If the above is not the case, check the capacitor with an ohmmeter to see if it is shorted between either of the terminals and case. If it is shorted, replace the capacitor.

E **PRIMARY INTERLOCK SWITCH AND THIRD DOOR SWITCH TEST**

Isolate the switch and connect the ohmmeter to the common (COM.) and normally open (NO) terminal of the switch. The meter should indicated an open circuit with the door open and a closed circuit with the door closed. If improper operation is indicated, replace the switch.

F **SECONDARY INTERLOCK SYSTEM TEST**

DOOR SENSING SWITCH
Isolate the switch and connect the ohmmeter to the common (COM.) and normally open (NO) terminal of the switch. The meter should indicated an open circuit with the door open and a closed circuit with the door closed. If improper operation is indicated, replace the door sensing switch.

SECONDARY INTERLOCK RELAY
Disconnect two (2) wire leads from the tab terminal of the secondary interlock relay (RY2). Check the state of the relay contacts using a ohmmeter. The relay contacts should be open. If the relay contacts are closed, replace the circuit board entirely or the relay itself.

G **MONITOR SWITCH**

Disconnect the oven from power supply.
Before performing this test, make sure that the primary interlock switch and the secondary interlock relay are operating properly, according to the above Test Procedures. Disconnect the wire lead from the monitor switch (NC) terminal. Check the monitor switch operation by using the ohmmeter as follows. When the door is open, the meter should indicate a closed circuit. When the monitor switch actuator is pushed by a screw driver through the lower latch hole on the front plate of the oven cavity with the door opened (in this condition the plunger of the monitor switch is pushed in), the meter should indicate an open circuit. If improper operation is indicated, the switch may be defective. After testing the monitor switch, re-connect the wire lead to the monitor switch (NC) terminal and check for continuity of monitor circuit.

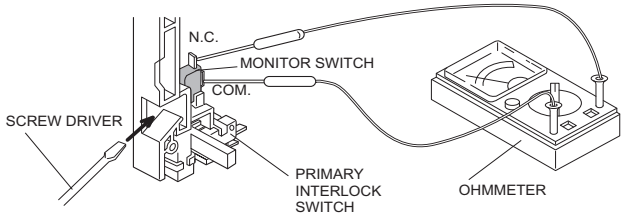

H **BLOWN MONITOR FUSE**

If the monitor fuse is blown when the door is opened, check the primary interlock switch, door sensing switch relay (RY1) and monitor switch according to the "TEST PROCEDURE" for those switches before replacing the blown monitor fuse.

CAUTION: IF THE MONITOR FUSE IS BLOWN BY IMPROPER SWITCH OPERATION, THE MONITOR FUSE AND SWITCH MUST BE REPLACED WITH "MONITOR FUSE AND SWITCH ASSEMBLY" PART NUMBER FFS-BA012WRK0, EVEN IF THE MONITOR SWITCH OPERATES NORMALLY. THE MONITOR FUSE AND SWITCH ASSEMBLY IS PACKED WITH 20 AMPERE FUSE AND SWITCH.

I **OVEN THERMAL CUT-OUT (on the side of steam duct)**

A continuity check across the thermal cut-out terminals should indicate a closed circuit unless the temperature of the oven thermal cut-out reaches approximately 302°F (150°C). The thermal cut-out reset automatically at approximately 266°F (130°C). If the thermal cut-out has operated under the normal condition, replace the thermal cut-out. An open thermal cut-out indicates overheating of the oven cavity.

TEST PROCEDURES

PROCEDURE LETTER	COMPONENT TEST

MAGNETRON THERMAL CUT-OUT (on the waveguide)

A continuity check across the thermal cut-out terminals should indicate a closed circuit unless the temperature of the thermal cut-out reaches approximately 257°F (125°C).
An open thermal cut-out indicates overheating of the magnetron. Check for restricted air flow to the magnetron through the vent holes of the oven cavity, especially the cooling duct and cooling fan.

CAUTION: IF THE THERMAL CUT-OUT INDICATES OPEN CIRCUIT AT ROOM TEMPERATURE, REPLACE THE THERMAL CUT-OUT.

CONVECTION CUT-OUT (on side of the heater duct)

A continuity check across the thermal cut-out terminals should indicate a closed circuit unless the temperature of thermal cut-out reaches 302°F (150°C). The thermal cut-out resets automatically at approximately 266°F (130°C). If the thermal cut-out has operated under the normal condition, replace the thermal cut-out. An open thermal cut-out indicates overheating of heater unit, check for restricted air flow to the heater unit through the vent hole of the oven cavity, especially the heater duct and convection fan.

J HEATING ELEMENT TEST

Make sure the heating element is fully cooled and test as follows;

a. Disconnect wire leads and measure the resistance with an ohmmeter. On the R x 1 scale, the resistance between the heating element terminals should be approximately 10.2Ω.
b. Disconnect wire leads and measure the insulation resistance with 500V - 100MΩ insulation resistance meter. The insulation resistance between heating element terminal and cavity should be more than 0.5MΩ.

K THERMISTOR TEST

Disconnect connector-E from the control unit. Measure the resistance of the thermistor with an ohmmeter. Connect the ohmmeter leads to Pin No's E-3 and E-4.

Room Temperature	Resistance
68°F(20°C) - 86°F(30°C)	Approx. 350kΩ - 155KΩ

If the meter does not indicate above resistance, replace the thermistor

L DAMPER MOTOR TEST

When the power cord is plugged into the wall receptacle and 117 volts A.C. is supplied to the damper motor, the motor operates until the damper is opened and the damper switch closes. Then the damper motor stops operation.
If the damper motor does not operate, check for A.C. voltage with a voltmeter at the motor.

1. Disconnect the power cord from the wall receptacle.
2. Disconnect the wire leads of motor and connect the meter leads to the wire leads of main wire harness.
3. Re-connect the power cord into the wall receptacle.
   If 117 volts A.C. is indicated at the wire leads, replace the motor and if 117 volts A.C. is not indicated, check the wire harness and control unit.

M DAMPER SWITCH TEST

Disconnect the wire leads from the switch terminals and connect ohmmeter leads to the common (COM.) and normally open (N.O.) terminals of the switch.

1. When switch actuator is pushed by the damper motor cam, the meter should be indicated a closed circuit.
2. When power cord is plugged into the wall receptacle, the damper motor operates and damper cam will start to rotate. When the switch actuator is released, the meter should be indicated an open circuit. If improper operation is indicated, replace the damper switch.

TEST PROCEDURES

PROCEDURE LETTER	COMPONENT TEST

CHECKING TEMPERATURE IN THE CONVECTION MODE

It is difficult to measure the exact temperature in the convection oven. An accurate thermocouple type temperature tester must be used. A low priced bi-metal type thermometer is not reliable or accurate. The temperature should be checked with outer case cabinet installed, approx. 5 minutes after preheat temperature is reached (audible signal sounds four times). The temperature experienced may be approx. 30°F more or less than indicated on the display, however, in most cases the food cooking results will be satisfactory.
Difference in power supply voltage will also affect the oven temperature. The Household power supply voltage may sometimes become lower than the rated voltage (117 V) and cause under-cooking. If the power supply voltage is 10% lower than the rated voltage, longer cooking time is required by 10% to 20%.

N **TOUCH CONTROL/TOUCH GLASS TEST**

1. Key Unit.
   Please note that key unit is projected capacitive touch technology. Touching the keyglass surface changes a key pad sensor's local electric field to activate a key action. The amount of finger flesh's needed to trigger key activation is ~10mm diameter surface contact to the glass surface. You should not press hard to active a key; only a light touch is needed to change the pad's local electric field.
   a) Run the oven and check all functions.
   The following symptoms indicate a defective key unit.
   b) When lightly touching a fingertip to any pad and one or more keys do not respond.
   c) When lightly touching a fingertip to any pad and only nearby keys respond.
   d) When any pad only responds when touch with excessive flesh like a large thumb (more than 20mm diameter of surface contact to the glass surface).
2. Control Unit
   The following symptoms indicate a defective control unit.

2-1 In connection with pads.
   a) when touch any keypad and there is no key response. Check if key cable is unplugged between control unit and key unit. Check if key cable end is fully seating into the key unit's connector.

2-2 In connection with indicators
   a) At a certain digit, all or some segments do not light up.
   b) At a certain digit, brightness is low.
   c) Only one indicator does not light.
   d) The corresponding segments of all digits do not light up; or they continue to light up.
   e) Wrong figure appears.
   f) A certain group of indicators do not light up.
   g) The figure of all digits flicker.

2-3 Other possible problems caused by defective control unit.
   a) Buzzer does not sound or continues to sound.
   b) Clock does not operate properly.
   c) Cooking is not possible.

3. If the Key unit or the Control unit is defective.
   1) Disconnect the power supply cord, and then remove outer case.
   2) Open the door and block it open.
   3) Discharge high voltage capacitor.
   4) Replace the Control unit assembly.
   5) Reconnect all leads removed from components during testing.
   6) Re-install the outer case (cabinet).
   7) Reconnect the power supply cord after the outer case is installed.
   8) Run the oven and check all functions.

TEST PROCEDURES

PROCEDURE LETTER	COMPONENT TEST

O NOISE FILTER TEST

Disconnect the oven from power supply.
Disconnect the lead wires from the terminal the noise filter. Using an ohmmeter, check between the terminals as described in the following table.

MEASURING POINT	INDICATION OF OHMMETER
Between N and H	Open circuit.
Between terminal N and GRAY	Short circuit.
Between terminal H and RED	Short circuit.

If incorrect reading are obtained, replace the noise filter.

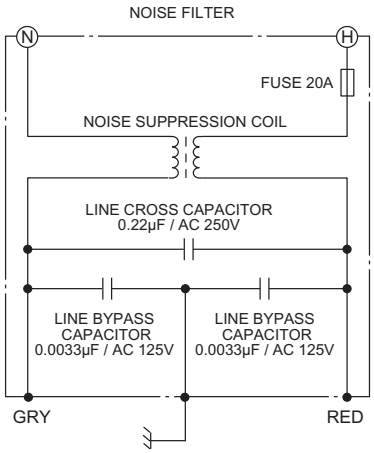

P RELAY TEST

Remove the outer case and check voltage between Pin Nos. 7 and 9 of the 9- pin connector (A) on the control unit an A.C. voltmeter. The meter should indicate 120 volts, if not check the oven circuitry.

Shut-off, Cook and Heater Relay Test
These relays are operated by D.C. voltage
Check voltage at the relay coil with a D.C. voltmeter during the microwave cooking operation or convection cooking operation.
DC. voltage indicated ..... Defective relay.
DC. voltage not indicated ..... Check diode which is connected to the relay coil. If diode is good, control unit is defective.

RELAY SYMBOL	OPERATIONAL VOLTAGE	CONNECTED COMPONENTS
RY1	Approx. 19.0V D.C.	Oven lamp / Turntable motor
RY2(COOK)	Approx. 18.0V D.C.	Power transformer
RY3(HEATER)	Approx. 18.0V D.C.	Heating element
RY4	Approx. 19.0V D.C.	Damper motor
RY5	Approx. 19.0V D.C.	Convection motor
RY6	Approx. 19.0V D.C.	Cooling fan motor

Q AUTO DEFROST TEST

(1) Place one cup of water in the center of the turntable tray in the oven cavity.
(2) Close the door, touch "AUTO DEFROST" pad, then number pads "1" and "5" (Defrost, Ground Meat, 0.5lbs). Finally touch the "START" pad..
(3) After 2 sec. Now the oven is in AUTO DEFROST cooking condition.
(4) The oven will operate as follows.

WEIGHT	1ST STAGE		2ND STAGE		3RD STAGE		4TH STAGE	
	LEVEL	TIME	LEVEL	TIME	LEVEL	TIME	LEVEL	TIME
0.5lbs	70%	47sec.	0%	52sec.	50%	32sec.	30%	40sec.

(5) If improper operation is indicated, the control unit is probably defective and should be checked.

TEST PROCEDURES

PROCEDURE LETTER	COMPONENT TEST

R **AH SENSOR TEST**

Checking the initial sensor cooking condition

(1) The oven should be plugged in at least two minutes before sensor cooking.
(2) Room temperature should not exceed 95°F (35°C).
(3) The unit should not be installed in any area where heat and steam are generated. The unit should not be installed, for example, next to a conventional surface unit. Refer to the "INSTALLATION Instructions".
(4) Exhaust vents are provided on the back of the unit for proper cooling and air flow in the cavity. To permit adequate ventilation, be sure to install so as not to block these vents. There should be some space for air circulation.
(5) Be sure the exterior of the cooking container and the interior of the oven are dry. Wipe off any moisture with a dry cloth or paper towel.
(6) The Sensor works with food at normal storage temperature. For example, chicken pieces would be at refrigerator temperature and canned soup at room temperature.
(7) Avoid using aerosol sprays or cleaning solvents near the oven while using Sensor settings. The sensor will detect the vapour given of by the spray and turn off before food is properly cooked.
(8) After 30 minutes if the sensor has not detected the vapour of the food, ERROR will appear and the oven will shut off.

Water load cooking test

Make sure the oven has been plugged in at least five minutes before checking sensor cook operation. The cabinet should be installed and screws tightened.
(1) Fill approximately 200 milliliters (7.2 oz) of tap water in a 1000 milliliter measuring cup.
(2) Place the container on the center of tray in the oven cavity.
(3) Close the door.
(4) Touch "BAKED POTATO" then "START". "BAKED POTATO SENSOR COOK" will appear in display.
(5) The oven will operate for the first 16 seconds, without generating microwave energy.

When the AH sensor is defective (open or short), Error will appear in the display after 16 seconds cleaning time.
If ERROR appears check sensor wire connections and/or AH sensor.
NOTE: ERROR will appear if the door is opened or STOP/CLEAR pad is touched during first stage of sensor cooking.
(6) After approximately 16 seconds, microwave energy is produced, and the display should start to count down the remaining cooking time and oven should turn off after water is boiling (bubbling).
If the oven does not turn off, replace the AH sensor or check the control unit, refer to explanation below.

TESTING METHOD FOR AH SENSOR AND/OR CONTROL UNIT

To determine if the sensor is defective, the simplest method is to replace it with a new replacement sensor.
(1) Disconnect oven from power supply and remove outer case.
(2) Discharge the high voltage capacitor.
(3) Remove the AH sensor.
(4) Install the new AH sensor.
(5) Re-install the outer case.
(6) Reconnect the oven to the power supply and check the sensor cook operation proceed as follows:
6-1. Fill approximately 200 milliliters (7.2 oz) of tap water in a 1000 milliliter measuring cup.
6-2. Place the container on the center of tray in the oven cavity.
6-3. Close the door.
6-4. Touch "BAKED POTATO" then "START".
6-5. Touch Start pad. The oven will operate for the first 16 seconds, without generating microwave energy.
6-6. After approximately 16 seconds, microwave energy is produced, and the display should start to count down the remaining cooking time and oven should turn off after water is boiling (bubbling).
If new sensor dose not operate properly, the problem is with the control unit.

TEST PROCEDURES

PROCEDURE LETTER	COMPONENT TEST

CHECKING CONTROL UNIT

(1) Disconnect oven from power supply and remove outer case.
(2) Discharge the high voltage capacitor.
(3) Disconnect the wire leads from the cook relay.
(4) Disconnect the sensor connector that is mounted to lower portion of control panel.
(5) Then connect the dummy resistor circuit (see fig.) to the sensor connector of control panel.
(6) Reconnect the oven to the power supply and check the sensor cook operation proceed as follows:
6-1. Touch "BAKED POTATO" then "START".
6-2. Touch Start pad. The control panel is in the sensor cooking operation.
6-3. After approximately 20 seconds, push plunger of select switch for more than 3 seconds. This condition is same as judgement by AH sensor.
6-4. After approximately 3 seconds, the display shows " X X . X X " which is the remaining cooking time, and the display count down.

If the above is not the case, the control unit is probably defective.
If the above is proper, the AH sensor is probably defective.

R1,R2 : 22Ω ± 1% 1/2W
R3 : 4.3kΩ ± 5% 1/4W
R4 : 1MΩ ± 5% 1/4W

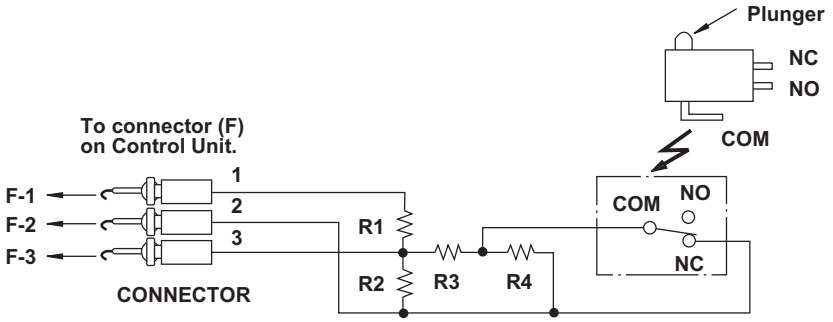

Sensor Dummy Resistor Circuit

ABSOLUTE HUMIDITY SENSOR CIRCUIT

(1) Structure of Absolute Humidity Sensor

The absolute humidity sensor includes two thermistors as shown in the illustration. One thermistor is housed in the closed vessel filled with dry air while another in the open vessel. Each sensor is provided with the protective cover made of metal mesh to be protected from the external airflow.

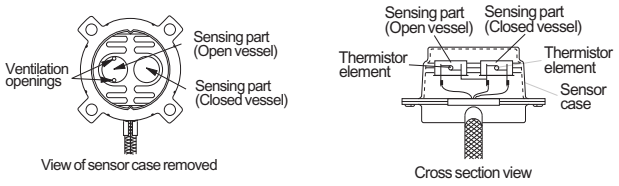

(2) Operational Principle of Absolute Humidity Sensor

The figure below shows the basic structure of an absolute humidity sensor. A bridge circuit is formed by two thermistors and two resistors (R1 and R2).

The output of the bridge circuit is to be amplified by the operational amplifier.

Each thermistor is supplied with a current to keep it heated at about 150°C (302°F), the resultant heat is dissipated in the air and if the two thermistors are placed in different humidity conditions they show different degrees of heat conductivity leading to a potential difference between them causing an output voltage from the bridge circuit, the intensity of which is increased as the absolute humidity of the air increases. Since the output is very minute, it is amplified by the operational amplifier.

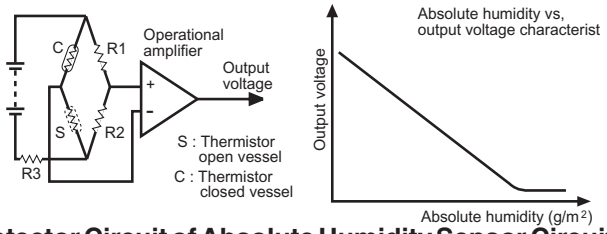

(3) Detector Circuit of Absolute Humidity Sensor Circuit

This detector circuit is used to detect the output voltage of the absolute humidity circuit to allow the LSI to control sensor cooking of the unit. When the unit is set in the sensor cooking mode, 16 seconds clearing cycle occurs than the detector circuit starts to function and the LSI observes the initial voltage available at its AN6 terminal. With this voltage given, the switches SW1 to SW5 in the LSI are turned on in such a way as to change the resistance values in parallel with R50-1. Changing the resistance values results in that there is the same potential at both F-3 terminal of the absolute humidity sensor and AN7 terminal of the LSI. The voltage of AN6 terminal will indicate about -2.5V. This initial balancing is set up about 16 seconds after the unit is put in the Sensor Cooking mode. As the sensor cooking proceeds, the food is heated to generate moisture by which the resistance balance of the bridge circuit is deviated to increase the voltage available at AN6 terminal of the LSI.

Then the LSI observes that voltage at AN6 terminal and compares it with its initial value, and when the comparison rate reaches the preset value (fixed for each menu to be cooked), the LSI causes the unit to stop sensor cooking; thereafter, the unit goes in the next operation automatically.

When the LSI starts to detect the initial voltage at AN6 terminal 16 seconds after the unit has been put in the Sensor Cooking mode, if it is not possible to balance, of the bridge circuit due to disconnection of the absolute humidity sensor, ERROR will appear on the display and the cooking is stopped.

1) Absolute humidity sensor circuit

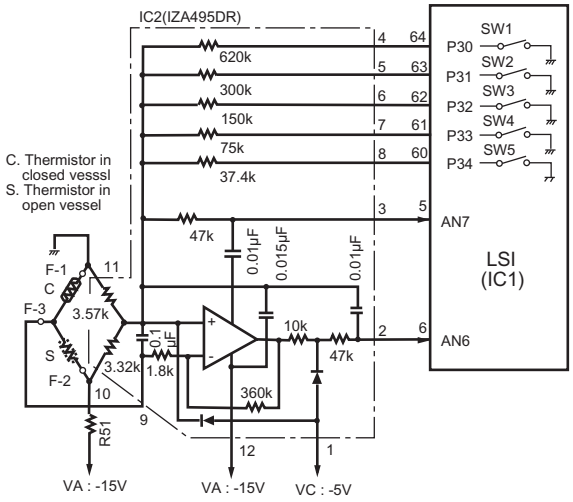

COMPONENT REPLACEMENT AND ADJUSTMENT PROCEDURE

CAUTION: DISCONNECT OVEN FROM POWER SUPPLY BEFORE REMOVING OUTER CASE.
DISCHARGE HIGH VOLTAGE CAPACITOR BEFORE TOUCHING ANY OVEN COMPONENTS OR WIRING AFTER REMOVING OUTER CASE.

WARNING FOR WIRING

To prevent an electric shock, take the following manners.

1. Before wiring,
   1) Disconnect the power supply.
   2) Open the door and wedge the door open.
   3) Discharge the high voltage capacitor and wait for 60 seconds.
2. Don't let the wire leads touch to the followiong parts;
   1) High voltage parts:
      Magnetron, High voltage transformer, High voltage capacitor and High voltage rectifier assembly.
   2) Hot parts:
      Convection heater, Oven lamp, Magnetron, High voltage transformer and Oven cavity.
   3) Sharp edge:
      Bottom plate, Oven cavity, Weveguide flange, Chassis support and other metallic plate.
   4) Movable parts (to prevent a fault)
      Fan blade, Fan motor, Switch, Switch lever, Open button.
3. Do not catch the wire leads in the outer case cabinet.
4. Insert the positive lock connector certainly until its pin is locked. And make sure that the wire leads should not come off even if the wire leads is pulled.
5. To prevent an error function, connect the wire leads correctly, referring to the Pictorial Diagram.

To remove the components, procedure as follows.

1. Disconnect oven from power supply.
2. Remove screws from rear and along the side edge of case.
3. Slide the entire case back out about 1 inch (3 cm) to free it from retaining clips on the cavity face plate.
4. Lift entire case from the unit.

CAUTION: DISCONNECT OVEN FROM POWER SUPPLY BEFORE REMOVING OUTER CASE.

POWER TRANSFORMER REMOVAL

1. Disconnect oven from power supply and remove outer case.
2. Discharge high voltage capacitor.
3. Disconnect filament leads of transformer from the magnetron and capacitor.
4. Disconnect high voltage lead of capacitor from the transformer.
5. Disconnect wire leads from the transformer.
6. Remove two (2) screws holding the transformer to the base cabinet.

Re-install

1. Rest the transformer on the base cabinet with its primary terminals toward rear cabinet.
2. Insert the two edges of the transformer into two metal tabs of the base cabinet.
3. Make sure the transformer is mounted correctly to the corners underneath those tabs.
4. After re-installing the transformer, secure the transformer with two screws to the base cabinet, one is with outer tooth washer and the other is without outer-tooth washer.
5. Re-connect the wire leads (primary and high voltage) and high voltage lead to the transformer and filament leads of transformer to the magnetron and capacitor, referring to the "Pictorial Diagram".
6. Re-install the outer case and check that the oven is operating properly.

NOTE HOT (ORANGE) WIRE MUST BE CONNECTED TO THE POWER TRANSFORMER TERMINAL NEAREST TO THE TRANSFORMER MOUNTING SCREW.

MAGNETRON REMOVAL

1. Disconnect oven from power supply and remove outer case.
2. Discharge the high voltage capacitor. Disconnect filament lead of transformer from magnetron. Disconnect high voltage wire lead from magnetron.
3. Carefully remove four (4) mounting screws hold the magnetron to waveguide, when removing the screws holding the magnetron to prevent it from falling.
4. Remove the magnetron from the unit with care so the magnetron tube should not hit by any metal object around the tube.

CAUTION: WHEN REPLACING THE MAGNETRON, BE SURE THE R.F. GASKET IS IN PLACE AND THE MAGNETRON MOUNTING SCREWS ARE TIGHTENED SECURELY.

HIGH VOLTAGE RECTIFIER ASSEMBLY REMOVAL

1. Disconnect oven from power supply and remove outer case.
2. Discharge the high voltage capacitor.
3. Remove one (1) screw holding the rectifier assembly to the capacitor holder.
4. Disconnect the rectifier assembly from the capacitor and magnetron.

CAUTION: WHEN REPLACING THE SILICON RECTIFIER ASSEMBLY, THE GROUND SIDE TERMINAL MUST BE SECURED FIRMLY WITH A GROUNDING SCREW.

HIGH VOLTAGE CAPACITOR REMOVAL

1. Disconnect oven from power supply and remove outer case.
2. Discharge the high voltage capacitor.
3. Disconnect the high voltage wire leads and rectifier assembly from high voltage capacitor and magnetron.
4. Disconnect filament lead of transformer from high voltage capacitor.
5. Disconnect high voltage wire lead of capacitor from transformer.
6. Remove one (1) screw and washer holding the rectifier from the capacitor holder.
7. Remove one (1) screw holding the capacitor holder to the rear cabinet.
8. Remove the capacitor from the holder.

POSITIVE LOCK® CONNECTOR (NO-CASE TYPE) REMOVAL

Push the lever of positive lock® connector. Pull down on the positive lock® connector.

CAUTION: WHEN YOU CONNECTING THE POSITIVE LOCK® CONNECTORS TO THE TERMINALS, INSTALL THE POSITIVE LOCK® SO THAT THE LEVER FACES YOU.

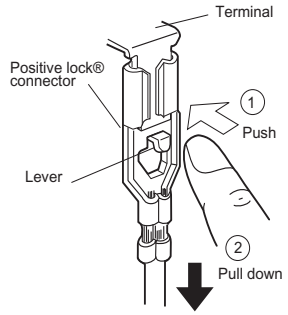

Figure C-1. Positive lock®connector

CONVECTION MOTOR REMOVAL

1. Disconnect oven from power supply and remove outer case.
2. Discharge the high voltage capacitor.
3. Disconnect wire leads from the convection motor. Remove the convection fan belt.
4. Remove two (2) screws holding the convection motor mounting angle to the heater duct and base cabinet.
5. Take out the convection motor assembly from the unit. The convection motor assembly is now free.
6. Remove two (2) screws and nuts holding the motor to mounting angle.
7. Remove pulley (M) from the motor shaft. Convection motor is now free.

TURNTABLE MOTOR REMOVAL

1. Disconnect the oven from power supply. Remove the turntable tray, and the turntable support out of the oven cavity.
2. Turn the oven upside down and remove one (1) screw holding the turntable motor cover to the base plate and take off the turntable motor cover.
3. Disconnect wire lead from the turntable motor.
4. Remove the two (2) screws holding the turntable motor and coupling mounting plate to the oven cavity bottom.
5. Turntable motor, Coupling mounting plate and Thermal protection plate bottom will be free.

DAMPER ASSEMBLY REMOVAL

1. Disconnect oven from power supply and remove outer case.
2. Discharge the high voltage capacitor.
3. Disconnect wire leads from damper motor and damper switch.
4. Remove two (2) oven side screws holding damper motor angle to thermal protection plate (right).
5. Damper assembly is free.
6. Remove one (1) screw holding damper motor to damper motor angle and one (1) screw holding damper switch to damper motor angle.
7. Damper motor and switch are free.

HEATER UNIT ASSEMBLY REMOVAL
(HEATING ELEMENT/CONVECTION FAN/CONVECTION MOTOR/THERMISTOR)

THERMISTOR REMOVAL

1. Disconnect oven from power supply and remove outer case cabinet.
2. Discharge the high voltage capacitor.
   Disconnect wire leads from H.V. capacitor and remove four (4) screws holding rear cabinet to bottom plate and three (3) screws holding to heater unit assembly and two (2) screws holding steam duct to top of oven cavity. Disconnect wire leads from power supply cord terminals.
3. Disconnect wire leads from thermistor. Remove two (2) screws from thremistor.
4. Disconnect wire leads from convection motor, thermal cut-out and heater element.
5. Remove nine (9) screws holding heater duct to the oven cavity.
6. Remove two (2) screws holding heater duct to base cabinet. Release two (2) snap bands holding wire harness to the thermal cover (convection).
7. The heater unit is now free.

HEATING ELEMENT REMOVAL

1. Remove two (2) screws holding heating element to heater duct.
2. Loosen two (2) screws holding holders to heater duct and take heating element out of heating element holders.
3. Heating element is free.

NOTE: After installed the heating element completely, bent top of the heating element holder to inside using by long nose pliers as shown following illustration.

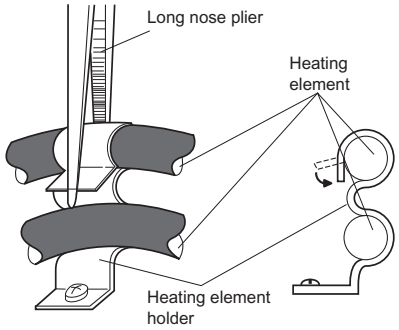

OVEN LAMP AND LAMP SOCKET REMOVAL

1. Disconnect oven from power supply and remove outer case.
2. Discharge high voltage capacitor.
3. Bend the tab of the air guide holding the lamp socket.
4. Lift up the oven lamp socket.
5. Pull the wire leads from the oven lamp socket by pushing the terminal hole of the oven lamp socket with the small flat type screw driver.
6. Now, the oven lamp socket is free.

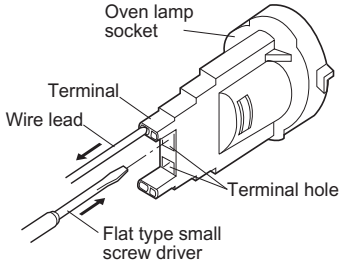

Figure C-2. Oven lamp socket

FAN MOTOR REMOVAL

1. Disconnect oven from power supply and remove outer case.
2. Discharge high voltage capacitor.
3. Disconnect the wire leads from the fan motor.
4. Remove one (1) screw holding the fan motor grounding wire to the air guide (Right).
5. Remove three (3) screws holding the chassis support to the rear cabinet, waveguide and control panel back plate.
6. Remove the chassis support from the oven.
7. Remove one (1) screw holding the magnetron air guide to the waveguide.
8. Remove the magnetron air guide from the waveguide.
9. Disconnect wire leads from the fan motor.
10. Release the main harness from the hole of the fan duct.
11. Release the thermistor harness from the hole of the fan duct.
12. Release one (1) tab holding the fan duct to the rear cabinet.
13. Release one (1) tab holding the fan duct to the air guide (Right).
14. Remove the fan duct assembly from the oven.
15. Remove the fan blade from the fan motor shaft according the following procedure.

1) Hold the edge of the rotor of the fan motor by using a pair of grove joint pliers.

CAUTION:

- *** Make sure that any pieces do not enter the gap between the rotor and the stator of the fan motor because the rotor is easily shaven by pliers and metal pieces may be produced.**
- *** Do not touch the pliers to the coil of the fan motor because the coil may be cut or injured.**
- *** Do not disfigure the bracket by touching with the pliers.**

2) Remove the fan blade from the shaft of the fan motor by pulling and rotating the fan blade with your hand.
3) Now, the fan blade will be free.

CAUTION:

- *** Do not use this removed fan blade again because the hole (for shaft) of it may become bigger than a standard one.**

16. Remove the two (2) screws and nuts holding the fan motor to the fan duct.
17. Now, the fan motor is free.

INSTALLATION

1. Install the fan motor to the fan duct with the two (2) screws and nuts.
2. Install the fan blade to the fan motor shaft according the following procedure.

1) Hold the center of the bracket which supports the shaft of the fan motor on the flat table.
2) Apply the screw lock tight into the hole (for shaft) of the fan blade.
3) Install the fan blade to the shaft of fan motor by pushing the fan blade with a small, light weight, ball peen hammer or rubber mallet.

CAUTION:

*** Do not hit the fan blade strongly when installed because the bracket may be disfigured.**

*** Make sure that the fan blade rotates smooth after installation.**

*** Make sure that the axis of the shaft is not slanted.**

3. Reset the fan duct assembly to its place.
4. Install the tabs of fan duct to the rear cabinet and air guide.
5. Install the magnetron air guide with the one (1) screw.
6. Reinstall the main harness and thermistor harness to each hole of the fan duct.
7. Reinstall the chassis support to the control panel back plate, waveguide and rear cabinet with the three (3) screws.
8. Re-connect the wire leads to the fan motor, referring to the pictorial diagram.
9. Re-install the fan motor grounding wire to the air guide (Right) with one (1) screw.

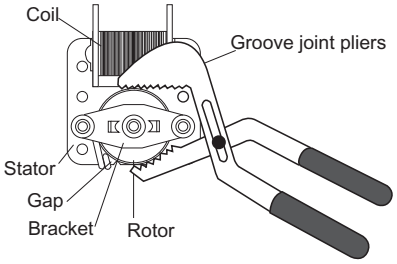

Rear View

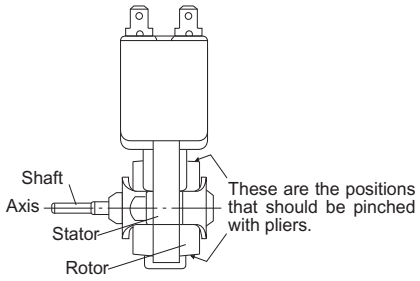

Side View

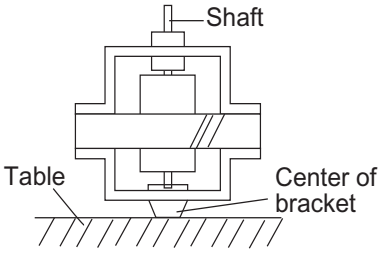

POWER SUPPLY CORD REPLACEMENT

Removal

1. Disconnect oven from power supply and remove outer case.
2. Discharge high voltage capacitor.
3. Disconnect the white and black wires of the power supply cord from the noise filter.
4. Remove the one (1) screw holding the earth wire of the power supply cord to the base cabinet.
5. Remove the power supply cord from the rear cabinet.

Re-install

1. Insert the power supply cord into the rear cabinet.
2. Connect the white and black wires of the power supply cord into the terminal of noise filter, referring to the Pictorial Diagram.
3. Re-install the earth wire of the power supply cord to the base cabinet with the one (1) screw.

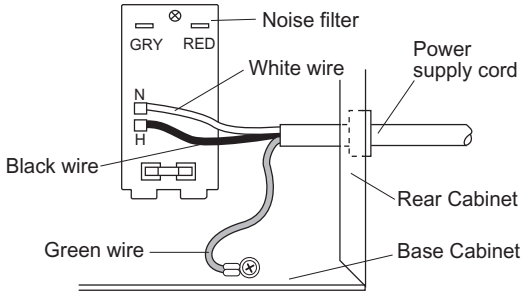

Figure C-3. Power supply cord replacement

CONTROL PANEL ASSEMBLY REMOVAL

1. Disconnect the power supply cord and then remove outer case.
2. Open the door and block it open.
3. Discharge high voltage capacitor.
4. Disconnect the wire leads from panel components including the Key Unit cable from the IC1 plug.
5. Remove one (1) screw holding the control panel back plate to the chassis support.
6. Remove two (2) screws holding the bottom edge of the back plate to the cabinet base.
7. Remove one (1) screw holding the back plate to the oven cavity flange.
8. Lift up and pull the control panel assembly forward.
7. Remove the 4 screws holding the Control Unit to the Touch Control Panel and carefully lift off.
8. Use reverse order to re-install new Control unit.

THIRD DOOR SWITCH, DOOR SENSING SWITCH, PRIMARY INTERLOCK SWITCH AND MONITOR SWITCH

REMOVAL

1. Disconnect oven from power supply and remove outer case.
2. Discharge high voltage capacitor.
3. Remove the control panel assembly, refer to "Control Panel Removal".
4. Disconnect wire leads from each of the switches and fuse holder.
5. Remove two (2) screws holding latch hook to oven flange.
6. Remove latch hook assembly from oven flange.
7. Push outward on the one (1) stopper tabs holding each of switches place.
8. Switch is now free.
   At this time switch lever will be free, do not lose it.

Re-install

1. Re-install switch lever and each interlock switch in its place. The primary interlock switch is in the lower position and the door sensing switch and thir door switch are in the upper position and the monitor switch is in the middle position.
2. Re-connect wire leads to each switches and fuse holder. Refer to pictorial diagram.
3. Secure latch hook (with two (2) mounting screws) to oven flange.
4. Make sure that the monitor switch is operating properly and check continuity of the monitor circuit.

Refer to chapter "Test Procedure" and Adjustment procedure.

THIRD DOOR SWITCH, DOOR SENSING SWITCH, PRIMARY INTERLOCK SWITCH AND MONITOR SWITCH ADJUSTMENT

If the door sensing switch, third door switch, primary interlock switch and monitor switch do not operate properly due to a misadjustment, the following adjustment should be made.

1. Loosen the two (2) screws holding latch hook to the oven cavity front flange.
2. With door closed, adjust latch hook by moving it back and forth, and up and down. In and out play of the door allowed by the latch hook should be less than 0.5mm. The vertical position of the latch hook should be adjusted so that the door sensing switch and primary interlock switch are activated with the door closed. The horizontal position of the latch hook should be adjusted so that the plungers of the monitor switch and the third door switch are pressed with the door closed.
3. Secure the screws with washers firmly.
4. Check the all switches operation. If each switch has not activated with the door closed, loosen the screw and adjust it.

After adjustment, check the following.

1. In and out play of door remains less than 0.5mm at the latched position.
2. The door sensing switch and primary interlock switch interrupt the circuit before the door can be opened.
3. Monitor switch contacts close when door is opened.
4. The third door switch contacts open when the door is opened.
5. Re-install outer case and check for microwave leakage around door with an approved microwave survey meter (Refer to Microwave Measurement Procedure.)

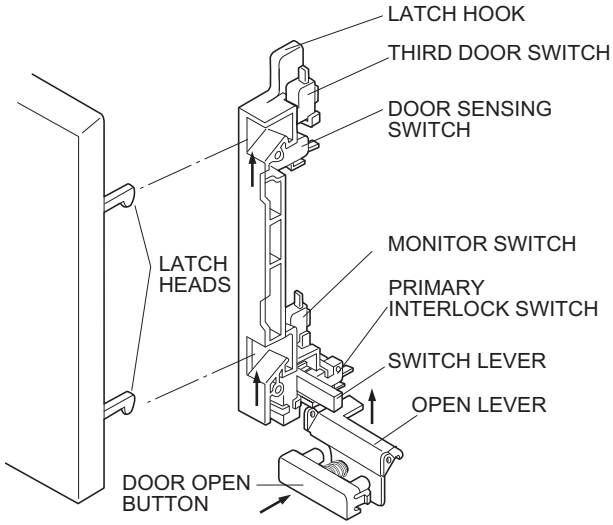

Figure C-4. Latch Switch Adjustments

DOOR REPLACEMENT AND ADJUSTMENT

REMOVAL

1. Disconnect oven from power supply and remove the outer case.
   Remove turntable tray and turntable support from oven cavity.
2. Remove three (3) screws holding lower oven hinge.
3. Remove the lower oven hinge from oven cavity bottom flange.
4. Remove door assembly from upper oven hinge on the oven.
5. Door assembly is now free.

Note: When the individual parts are replaced, refer to "Door Disassembly".

6. On re-installing door, insert the upper oven hinge into the door hinge pin. Then while holding door in place.

7. Make sure the door is parallel with oven face lines (left and upper side lines) and door latch heads pass through latch holes correctly.
8. Insert the lower oven hinge into oven cavity bottom flange and then engaged the door hinge pin. Then secure the lower oven hinge firmly with tree (3) mounting screws.

Note: After any service to the door;

(A) Make sure that door sensing switch and secondary interlock switch are operating properly. (Refer to chapter "Test Procedures".).

(B) An approved microwave survey meter should be used to assure compliance with proper microwave radiation emission limitation standards.

DOOR ADJUSTMENT

The door can be adjusted by keeping screws of each hinge loose.

After adjustment, make sure of the following :

1. Door latch heads smoothly catch latch hook through latch holes and that latch head goes through center of latch hole.
2. Deviation of door alignment from horizontal line of cavity face plate is to be less than 1.0mm.
3. Door is positioned with its face pressed toward cavity face plate.
4. Re-install outer case and check for microwave leakage around door with an approved microwave survey meter. (Refer to Microwave Measurement Procedure.)

Note: The door on a microwave oven is designed to act as an electronic seal preventing the leakage of microwave energy from oven cavity during cook cycle. This function does not require that door be airtight, moisture (condensation)-tight or light-tight. Therefore, occasional appearance of moisture, light or sensing of gentle warm air movement around oven door is not abnormal and do not of themselves indicate a leakage of microwave energy from oven cavity. If such were the case, your oven could not be equipped with a vent, the very purpose of which is to exhaust the vapor-laden air from the oven cavity.

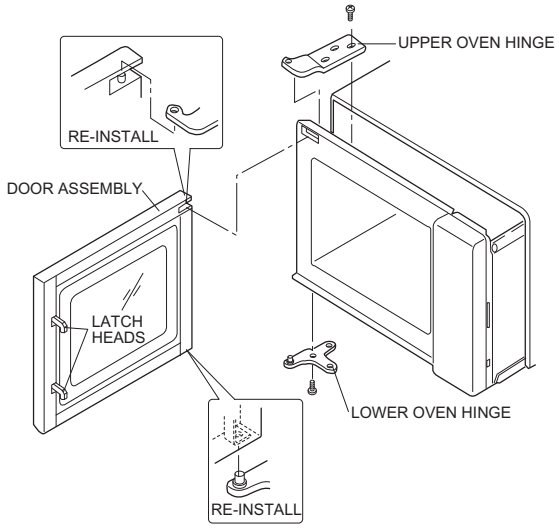

Figure C-5. Door Replacement and adjustment

DOOR DISASSEMBLY

Remove door assembly, refer to "Door Replacement".
Replacement of door components are as follows:

1. Place door assembly on a soft cloth with latches facing up.

Note: As the engaging part of choke cover and door panel are provided at several places, do not force any particular part.

2. Insert an putty knife (thickness of about 0.5mm) into the gap between the choke cover and corner portion of door panel as shown Figure C-6 to free engaging parts.
3. Lift up choke cover.
4. Now choke cover is free from door panel.

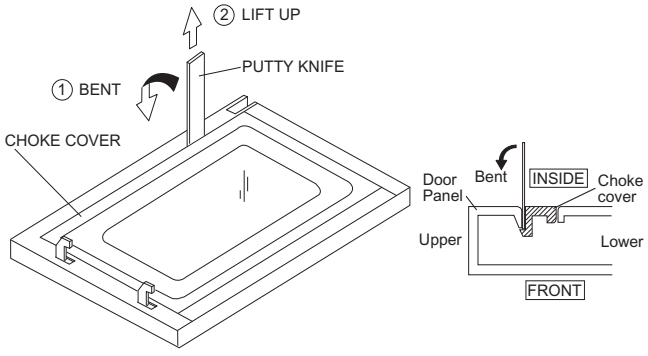

Figure C-6. Door Disassembly

MICROWAVE MEASUREMENT PROCEDURE

After adjustment of the door, interlock and monitor switches are completed individual or collectively, interlock switch test and microwave leakage test must be performed with survey instrument and test results must be confirmed to meet the requirement of the performance standard for microwave ovens as undermentioned.

Requirement

Every microwave oven shall function in such a manner that when the oven is fully assembled and operating with it's service controls and user controls adjusted to yield the maximum output, the leakage radiation, at all points at least 5 cm. from the external surface of the oven, does not exceed:

1. 1.0mW/cm^2 with the test load, 275±15ml of water at an initial temperature of 20±5°C.
2. 5.0mW/cm^2 when the outer enclosure is removed with a test load of 275±15ml water at an initial temperature of 20±5°C.
3. 5.0mW/cm^2 without a test load.

Preparation For Testing:

Before beginning the actual measurement of leakage, proceed as follows:

1. Make sure that the actual instrument is operating normally as specified in its instruction booklet.

Note: Survey instruments that comply with the requirement for instrumentation as prescribed by CSA and NHW performance standard for microwave ovens must be used for testing.

Recommended instruments are:
NARDA 8100
NARDA 8200

2. Place the oven tray in the oven cavity.
3. Place the load of 275±15 ml of tap water initially at 20±5°C in the center of the oven cavity.
   The water container shall be a low form of 600 ml beaker with an inside diameter of approx. 8.5 cm and made of an electrically nonconductive material such as glass or plastic.
   The placing of this standard load in the oven is important not only to protect the oven, but also to insure that any leakage is measured accurately.
4. Close the door and set the time cooking for several minutes. And start the oven. If the water load is depleted replace it.

Leakage test:

Leakage Test with Enclosure Installed.

1. Grasp the probe of the survey instrument and hold it perpendicular to the gap between the door and the body of the oven.
2. Move the probe slowly, not faster than 2.5cm/sec. along the gap, watching for the maximum indication on the meter.
3. Check for leakage at the door screen, sheet metal seams and other accessible positions where the continuity of the metal has been breached (eg., around the switches, indicator, and vents).
4. Measure carefully at the point of highest leakage and make sure that the highest leakage is no greater than 4mW/cm^2, and that the primary interlock switch does turn the oven OFF before any door movement.

Leakage Test without Enclosure.

1. Remove the enclosure (cabinet).
2. Grasp the probe of the survey meter and hold it perpendicular to all mechanical and electronic parts of the oven that is accessible to the user of the oven including, but not limited to, the waveguide, cavity, cavity seams, magnetron and magnetron to waveguide connection.
3. Move the probe slowly (not faster than 2.5cm/sec.), watching for the maximum indication on the meter.
4. Measure carefully at the point of highest leakage and make sure that the highest reading is under the required limit as mentioned above.

CAUTION !

Special attention should be given to avoid electrical shock because HIGH VOLTAGE is generated during this test.

No Load Test

1. Operate the oven without a load and mesure the leakage by the same method as the above test procedure "A. Test Enclosure Installed".
2. Make sure that the highest leakage should not exceed 5mW/cm^2.

Note: Do not perform this test for extended periods.

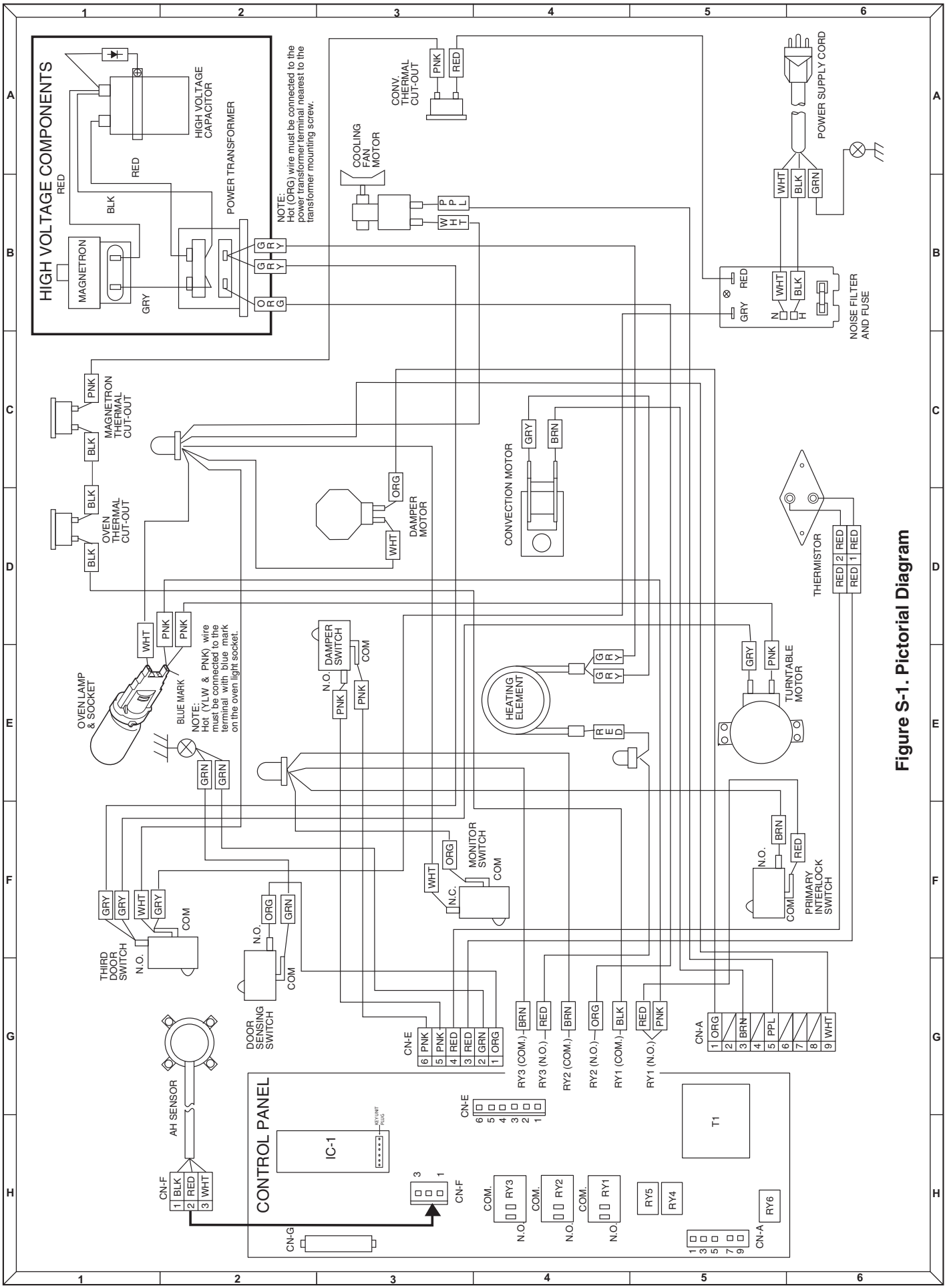

Figure S-1. Pictorial Diagram