CT, CTE Hoods & 9_ Downdraft Service Manual

General Information 2
Installation Information 6
Controls & Operation 23
Component Access & Removal 25
Troubleshooting Guide 34
Technical Data 37
Wiring Diagrams 39

INTRODUCTION

This Wolf Cooktop and Downdraft Ventilation Technical Service Manual, has been compiled with information provided by Broan-Nu Tone LLC. This manual provides the most recent technical service information that will enable the service technician to troubleshoot and diagnose malfunctions, perform necessary repairs and return a Wolf Ventilation product to proper operational condition.

The service technician should read the complete instructions contained in this Service Manual before initiating any repairs on a Wolf Appliance.

IMPORTANT SAFETY INFORMATION

Below are the Product Safety Labels used in this manual.

The “Signal Words” used are **WARNING** & **CAUTION**.

Please note that these safety labels are placed in areas where awareness of personal safety and product safety should be taken and lists the precautions to be taken when the signal word is observed.

⚠ WARNING

Indicates that hazardous or unsafe practices could result in severe personal injury or death

⚠ CAUTION

Indicates that hazardous or unsafe practices could result in minor personal injury or product and/or property damage

In addition, please pay attention to the signal word “***NOTE***”, which highlights especially important information within each section.

TECHNICAL ASSISTANCE

If you should have any questions regarding a Wolf appliance and/or this manual, please contact:

Wolf Appliance, Inc.
ATTN.: Service Department
P.O. Box 44988
Madison, WI 53744-4988

Customer Service
Phone #: (800) 332 - 9513

Technical Assistance
Phone #: (800) 919 - 8324

Parts / Warranty Claims
Phone #: (800) 332 - 9513

Customer Service E-mail Address
customerservice@wolfappliance.com

Customer Service & Technical Assistance
Facsimile #: (608) 441 - 5887

Parts / Warranty Claims
Facsimile #: (608) 441 - 5886

Off ce Hours:
7:00 AM to 7:00 PM Central Standard Time
Monday through Friday

This manual is designed to be used by Authorized Service Personnel only. Wolf Appliance, Inc. assumes no responsibility for any repairs made to Wolf appliances by anyone other than Authorized Service Technicians.

The information and images contained in this manual are the copyright property of Wolf Appliance, Inc., an affiliate of Sub-Zero, Inc. Neither this manual nor any information or images contained herein may be copied or used in whole or in part without the express written permission of Wolf Appliance, Inc., an affiliate of Sub-Zero, Inc. © Wolf Appliance, Inc., all rights reserved.

WARRANTY INFORMATION

This page contains a summary of the Warranty supplied with every Domestic Wolf ventilation product, followed by details about the warranty.

NOTE: "ICB" warranties vary by Country and Distributor. Contact selling Distributor for warranty coverage.

2 & 5 Year Warranty Summary

- 2 Year Total Product Warranty, Parts and Labor.
- L 3-5 imited *Parts Only Warranty (Including Blower motors).

Details:

- *Warranty applies to products installed in United States or Canada, for residential use only.*
- *Warranty begins at time of unit's initial installation.*
- *This Warranty does not cover Wolf Appliances installed in a demonstration kitchen, test kitchen, culinary school kitchen, or similar installations. (See Special Warranty below)*
- *Warranty and Service information collected by Wolf Appliance, Inc. is arranged and stored under unit serial number and/or customer's name. Please note that Wolf Appliance, Inc requests that you have model and serial number available whenever contacting factory or parts distributor.*

Special Warranty Summary

- 2 Year Total Product Warranty, Part and Labor.

Details:

- *This Warranty applies to products installed in United States or Canada, for use in a demonstration kitchen, test kitchen, culinary school kitchen, and similar installations that will help promote Wolf Appliance brand and its products.*
- *Warranty begins at time of unit's initial installation.*
- *Warranty and Service information collected by Wolf Appliance, Inc. is arranged and stored under unit serial number and/or customer's name. Please note that Wolf Appliance, Inc. requests that you have model and serial number available whenever contacting factory or parts distributor.*

Information Plate and Serial Number

- *See Figure 1-1 for typical Information Plate layout.*
- *See Figures 1-2 & 1-3 for Serial Number location.*

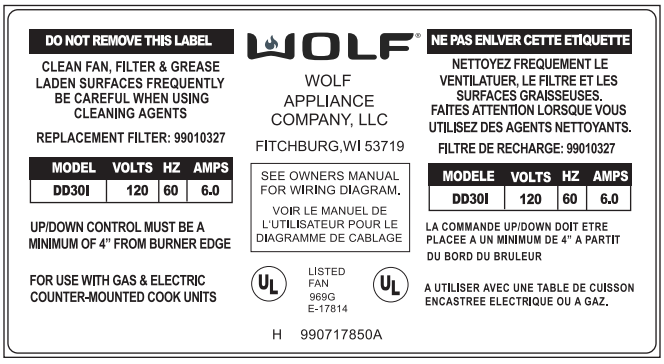

Figure 1-1 Serial Plate Layout

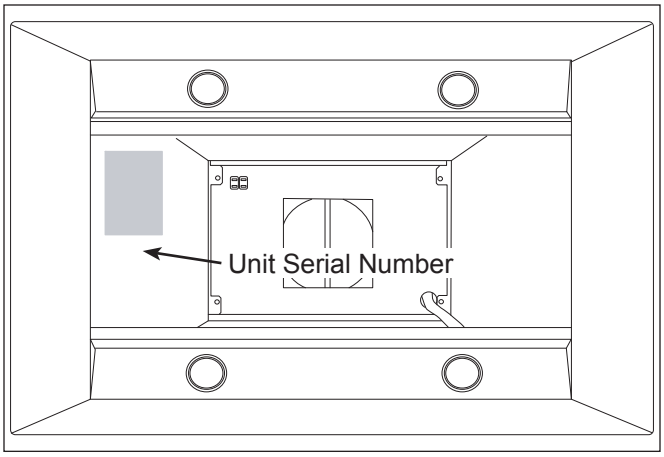

Figure 1-2 Serial Plate Location (CT Hoods)

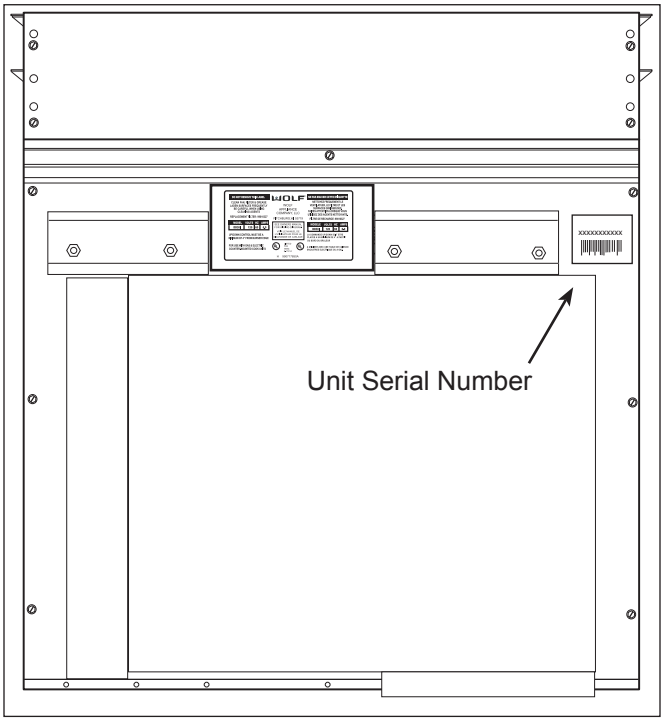

Figure 1-3 Serial Plate Location (DD Ventilation)

MODEL DESCRIPTIONS

This section explains the model numbering system for the CT Hoods and Downdraft models covered in this manual.

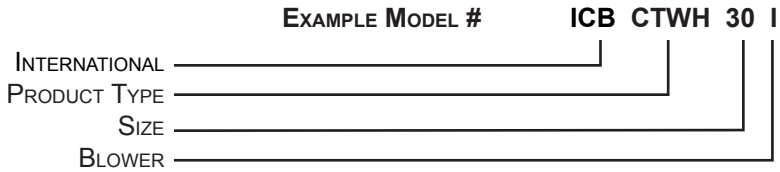

Product Type

CTWH Cooktop (or Chimney) Wall Hood

CTEWH C ooktop (or Chimney) Low Profile Wall Hood

CTEIH C ooktop (or Chimney) Low Profile Island Hood

IH Island Hood

DD Down Draft

Size

30 30 inch wide unit

36 36 inch wide unit

42 42 inch wide x 27 inch deep
(O nly on Island hood)

45 45 Inch wide unit
(O nly on Down Draft)

Blower Type

I Internal Blower

R Remote Blower

CT & Island Hood Over-all Dimensions

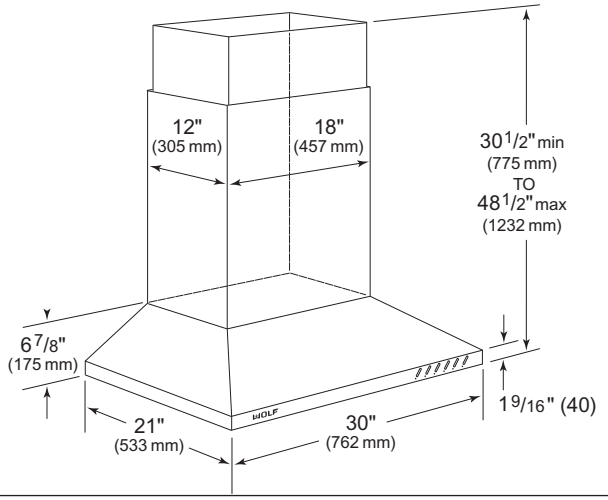

MODEL CTWH30	
Overall Width	30" (762)
Overall Height (excluding chimney)	6 7/8" (175)
Overall Height (including chimney)	30 1/2" (775)
Max Height (full extension)	48 1/2" (1232)
Overall Depth	21" (533)
Shipping Weight (shell only)	85 lbs (39 kg)

Dimensions may vary to ±1/8" (3).

Figure 2-1 CTWH30 Dimensions

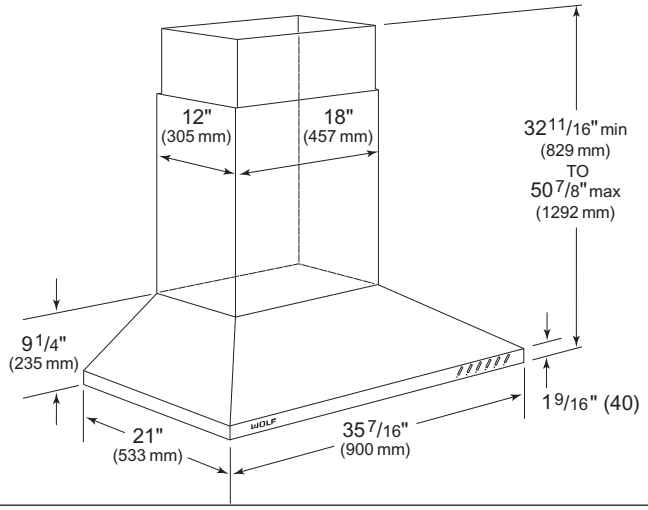

MODEL CTWH36	
Overall Width	35 7/16" (900)
Overall Height (excluding chimney)	9 1/4" (235)
Overall Height (including chimney)	32 11/16" (830)
Max Height (full extension)	50 7/8" (1292)
Overall Depth	21" (533)
Shipping Weight (shell only)	100 lbs (45 kg)

Dimensions may vary to ±1/8" (3).

Figure 2-2 CTWH36 Dimensions

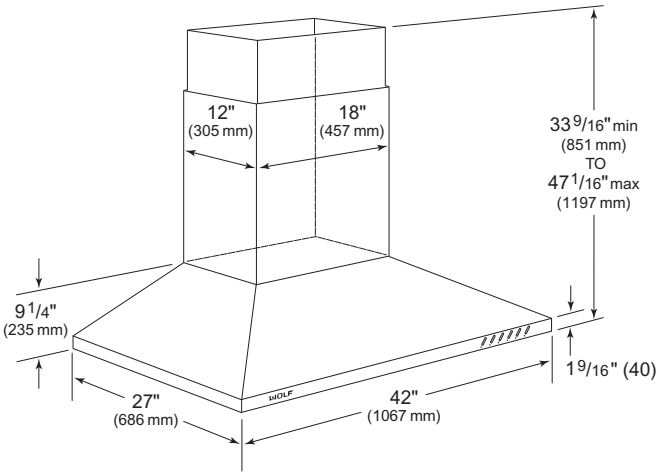

MODEL IH4227	
Overall Width	42" (1067)
Overall Height (excluding chimney)	9 1/4" (235)
Overall Height (including chimney)	33 9/16" (853)
Max Height (full extension)	47 1/16" (1195)
Overall Depth	27" (686)
Shipping Weight (shell only)	110 lbs (50 kg)

Dimensions may vary to ±1/8" (3).

Figure 2-3 IH4227 Dimensions

CTEW Hood Over-all Dimensions

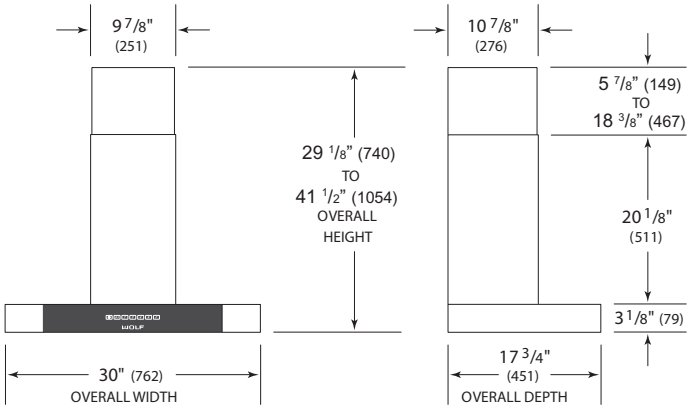

MODEL CTEWH30I	
Overall Width	30” (762)
Height (excluding chimney)	3 1/8” (79)
Min Height (including chimney)	29 1/8”(740)
Max Height (full extension)	41 1/2”(1054)
Overall Depth	17 3/4”(451)
Shipping Weight	53 lbs (24kg)

Figure 2-4 CTEWH30 Dimensions

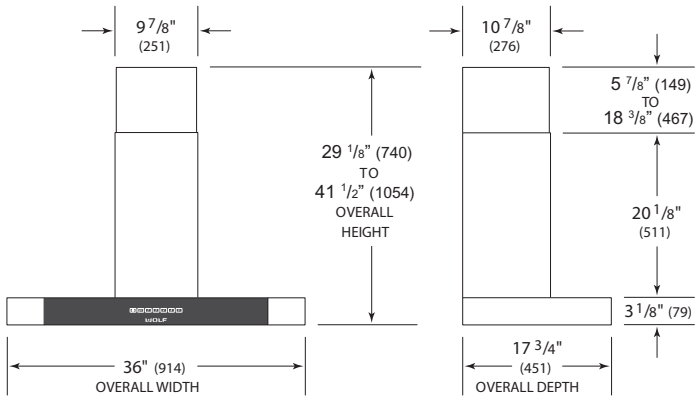

MODEL CTEWH36(I)	
Overall Width	36” (914)
Height (excluding chimney)	3 1/8” (79)
Min Height (including chimney)	29 1/8”(740)
Max Height (full extension)	41 1/2”(1054)
Overall Depth	17 3/4” (451)
Shipping Weight	
CTEWH36	51 lbs (23 kg)
CTEWH36(I)	57 lbs (26 kg)

Figure 2-5 CTEWH36 Dimensions

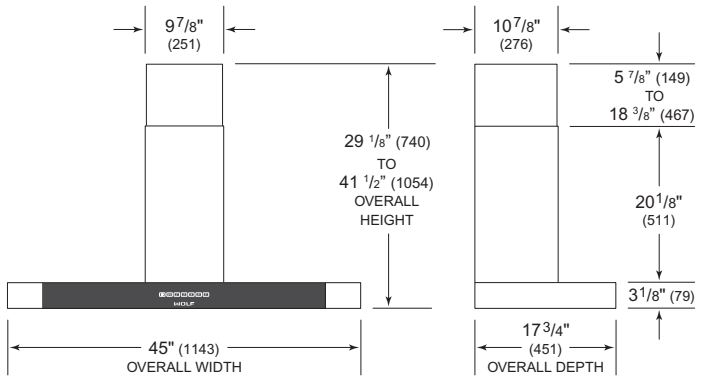

MODEL CTEWH45(I)	
Overall Width	45” (1143)
Height (excluding chimney)	3 1/8” (79)
Min Height (including chimney)	29 1/8” (740)
Max Height (full extension)	41 1/2” (1054)
Overall Depth	17 3/4” (451)
Shipping Weight	
CTEWH45	55 lbs (25 kg)
CTEWH45I	63 lbs (29 kg)

Figure 2-6 CTEWH45 Dimensions

CTEI Hood Over-all Dimensions

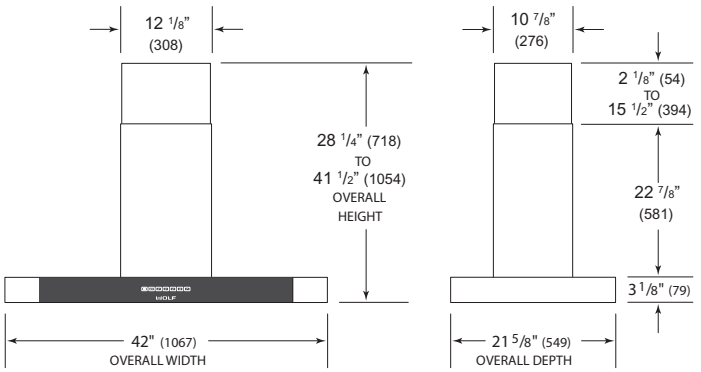

MODEL CTEIH42	
Overall Width	42” (1067)
Height (excluding chimney)	3 1/8” (79)
Min Height (including chimney)	28 1/4” (718)
Max Height (full extension)	41 1/2” (1054)
Overall Depth	21 5/8” (549)
Shipping Weight	92 lbs (42 kg)

Figure 2-7 CTEIH42 Dimensions

Hood Placement

Flue Extension

Model	Minimum	Maximum
CTWH30	30 1/2" (775)	48 1/2" (1232)
CTWH36	32 11/16" (830)	50 7/8" (1292)
IH4227	33 9/16" (853)	47 1/16" (1195)
CTEWH30I	29 1/8" (740)	41 1/2" (1054)
CTEWH36(I)	29 1/8" (740)	41 1/2" (1054)
CTEWH45(I)	29 1/8" (740)	41 1/2" (1054)
CTEIH42I	28 1/4" (718)	41 1/2" (1054)

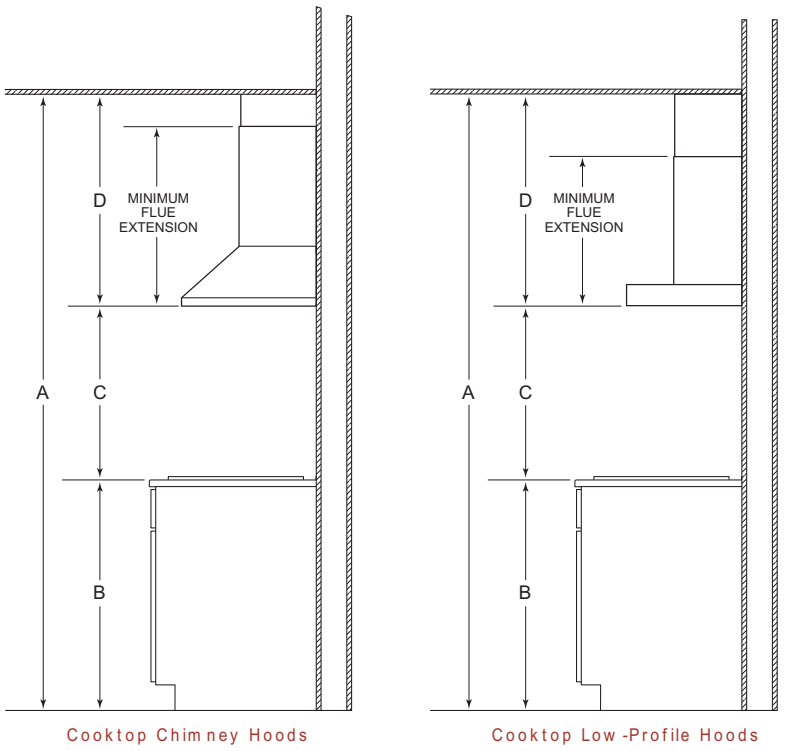

Figure 2-8 Hood Placement Dimensions

Hood Placement

Wolf cooktop wall and island hoods come with a telescopic chimney flue that allows you to reach ceiling heights of 8' (2.4m) to 9' (2.7m) with a finished look. A flue extension to accommodate 10' (3m) ceilings is available as a sales accessory for cooktop chimney hoods only.

Installation of the cooktop wall or island hood should be 24" (610) to 30" 762) from the bottom of the hood to the countertop.

To determine placement of the wall or island hood, you must calculate the heights of the telescopic chimney flue. Refer to the chart in Figure 2-8 above for the minimum and maximum flue extension for specific hood.

NOTE: Both sections of the telescopic chimney flue must be installed in order for the chimney to be lifted for service.

NOTE: If the height of the upper flue section is less than 1/2" (13), you will need to modify the flue to affix to the flue attachment brackets.

Calculating Chimney Flue Height

1. Measure A (total kitchen height from finished floor to finished ceiling height).
2. Measure B (height from finished floor to countertop).
3. Determine the desired distance from counter-top to bottom of hood (C). This dimension must be between 24" (610) and 30" (762).

NOTE: 8' (2.4m) ceilings may not permit installation of the wall or island hood at 30" (762) above the countertop.

4. To calculate the chimney flue height (D): D = A – (B + C). This dimension must be between the minimum and maximum flue extension for your specific hood as shown in the chart.

CT Wall Hood Ductwork Installation

Connect Ductwork

Use the screws and wall anchors provided to secure the upper brackets to the ceiling. Position the upper brackets based on the dimension of the telescopic chimney f ue. (See Figure 2-9)

Use an 8” (203) round metal duct to connect the duct collar on the hood to the ductwork above. Use duct tape to make all joints secure and air tight.

Connect the upper section of the telescopic chimney f ue to the brackets with the screws provided. (See Figure 2-10)

Nest the bottom of the telescopic chimney f ue into the relief in the hood shell.

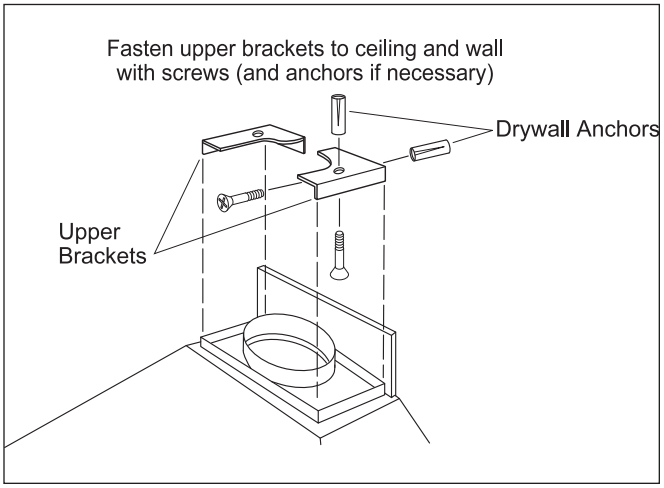

Figure 2-9 Upper Flue Bracket Installation

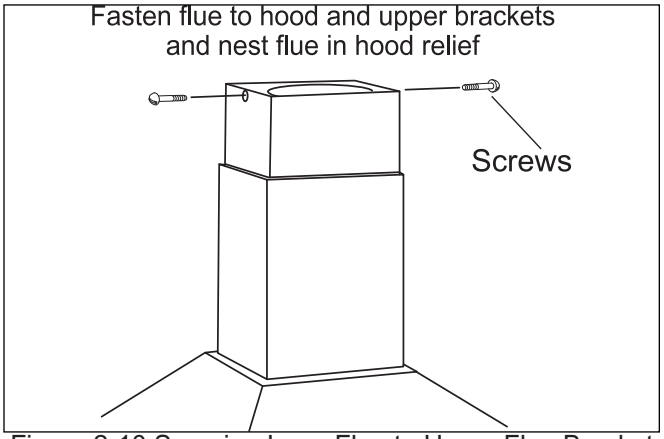

Figure 2-10 Securing Inner Flue to Upper Flue Bracket

Island Hood Installation Considerations

⚠ WARNING

TO REDUCE THE RISK OF FIRE, USE ONLY METAL DUCTWORK.

⚠ CAUTION

TO REDUCE THE RISK OF FIRE AND ELECTRIC SHOCK, THIS VENTILATION HOOD SHOULD ONLY BE INSTALLED WITH BLOWERS MANUFACTURED BY WOLF APPLIANCE INC. AND SPECIFIED FOR USE WITH THESE VENTILATION MODELS.

Island Hood Installation Specifications and Preparation for Model IH4227

1. A straight, short duct run will allow the hood to perform more eff ciently. Limit the number of elbows and transitions to as few as possible. Long duct runs, elbows and transitions will reduce the performance of the hood.

NOTE: All hoods must exhaust to the outdoors.

NOTE: There is a possibility of noise issues, if a short duct run is coupled with a remote blower.

2. Always use metal ducting. Do not use f ex ducting.
3. Wolf recommends installing a back-draft damper in all installations (included with hood). In cold weather installations a back-draft damper is necessary to minimize the back-f ow of cold air into the room.
4. Wolf recommends the hood be installed 24” (610 mm) to 30” (762 mm) above the cooking surface.

NOTE: Local building codes may require the use of make-up air. Consult a local HVAC professional for specif c requirements.

Electrical Requirements

Wolf cooktop wall hoods require a separate, grounded, 110/120 VAC, 60 Hz power supply. The service should have its own 15 amp circuit breaker.

NOTE: You must follow all National Electrical Code regulations. In addition, be aware of local codes and ordinances when installing your service.

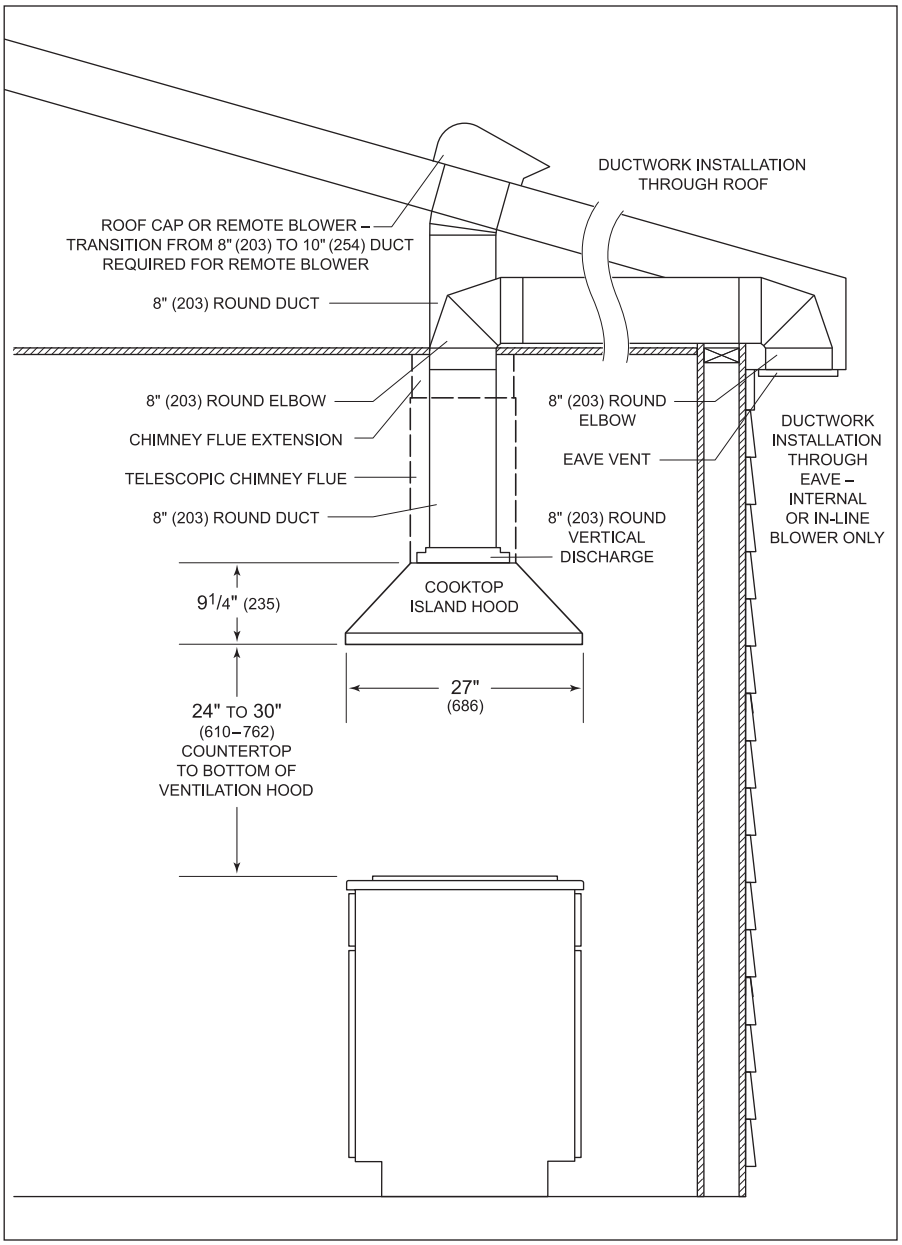

Figure 2-11 Island Hood Installation Considerations

Island Hood Installation

⚠ WARNING

DUE TO THE WEIGHT OF SOME HOODS, SEVERAL PEOPLE MAN BE REQUIRED FOR A SAFE AND PROPER INSTALLATION.

FRAMING MUST BE STRUCTURALLY TIED TOGETHER AND TIED TO CEILING JOISTS TO PROVIDE ENOUGH STRENGTH TO SUPPORT WEIGHT OF THE HOOD AND INTERNAL BLOWER, IF APPLICABLE.

Install Support System

1. At the island hood installation location, install two-by-four or 3/4”(19) plywood cross framing between ceiling joists. Refer to the island hood mounting pattern dimensions. (See Figure 2-12)
2. Finish the ceiling surface. Be sure to mark the location of the ceiling joists and cross framing.
3. Determine the desired orientation of the island hood. Note that the front designates the control side of the hood.
4. Secure the upper half of the support frame to the joists and cross framing with four screws provided with your hood. Make sure that the screws are driven into the center of the joists and framing for maximum strength. (See Figure 2-13)
5. Adjust the overall height of the support frame. Loosen and retighten the screws in the height adjustment slots as necessary. (See Figure 2-13)

NOTE: The hood height is 11 1/4”(286) from the support frame attachment point. The bottom of the hood must be 24” (610)minimum and 30” (762) maximum from the countertop.

6. Secure the upper telescopic chimney f ue section to the upper support frame. (See Figure 2-14)

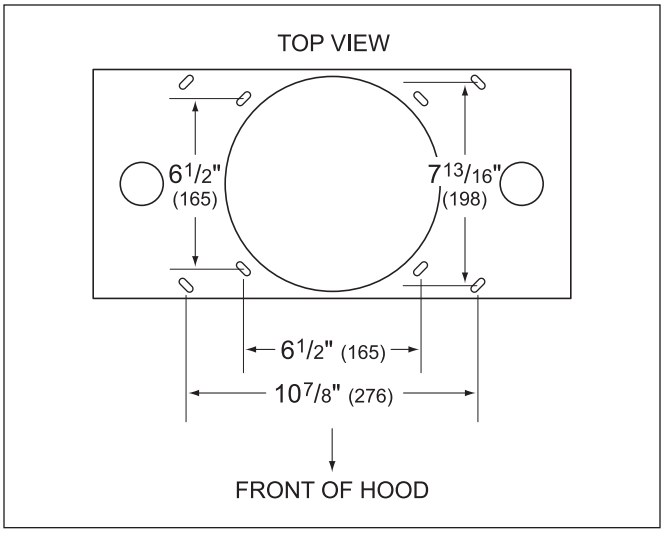

Figure 2-12 Telescopic Flue Mounting

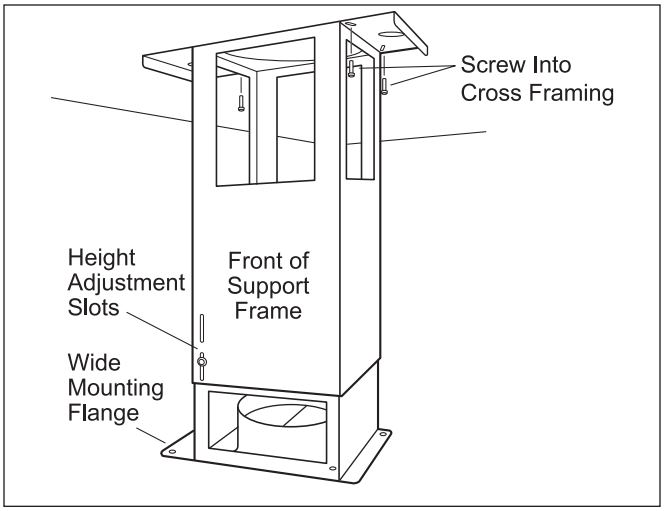

Figure 2-13 Support Frame

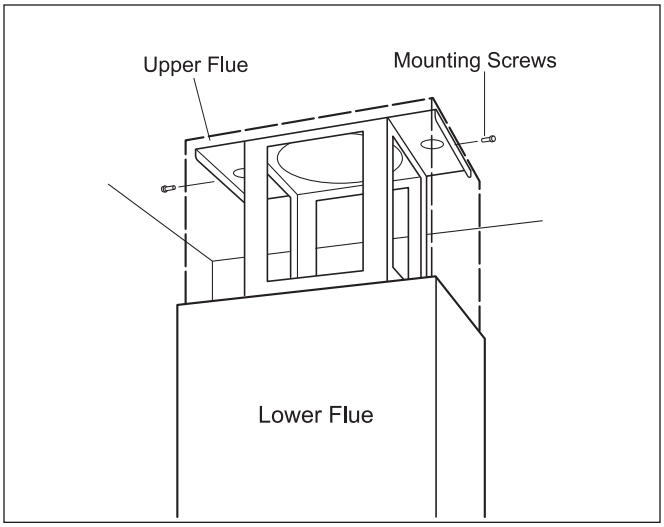

Figure 2-14 Upper Chimney Flue Mounting

Mount Hood to Support Frame

1. Temporarily secure the lower telescopic chimney f ue section over the upper f ue section.
2. Mount the hood to the support frame by aligning the four weld screws on the hood to the four holes on the support frame. Use four nuts to secure the hood to the support frame. (See Figure 2-15).

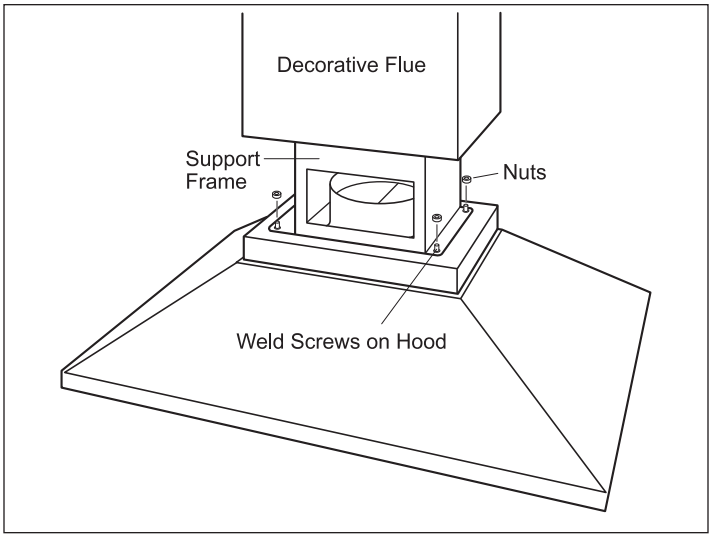

Figure 2-15 Mounting Hood to Support System

Electrical Connections

⚠ WARNING

TO REDUCE THE RISK OF ELECTRICAL SHOCK, THIS VENTILATION HOOD MUST BE PROPERLY GROUNDED.

UNIT SHOULD BE CONNECTED ELECTRICALLY BY A QUALIFIED ELECTRICIAN IN ACCORDANCE WITH ALL APPLICABLE NATIONAL AND LOCAL ELECTRICAL CODES.

1. Remove the cover from the rear electrical box knockout that faces the hood's discharge collar.
2. Insert 6" (152) of 120 VAC power cable through the knockout opening. Secure the cable to the electrical box with an appropriate connector.
3. Make electrical connections. Connect black to black, white to white and green/yellow to green or bare wire. (See Figure 2-16)
4. Reinstall the electrical box cover and screws. Make sure that all wires are secure and that no wires are pinched between the cover and box.
5. Use an 8" (203) round metal duct to connect the duct collar on the hood to the ductwork above. Use duct tape to make all joints secure and air tight.
6. Slide the lower telescopic chimney f ue section downward until it f ts properly around the hood shell.

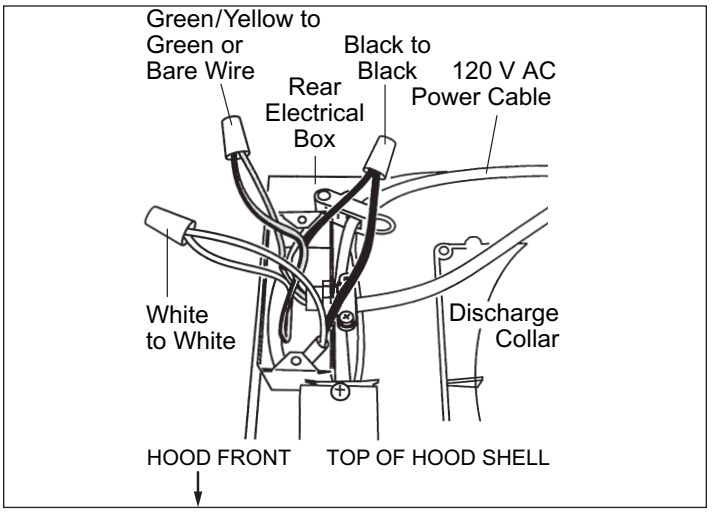

Figure 2-16 Electrical Connections

Internal Blower Installation

⚠ WARNING

TO REDUCE THE RISK OF ELECTRICAL SHOCK, POWER SHOULD BE TURNED OFF TO UNIT BEFORE ATTEMPTING THE FOLLOWING PROCEDURE.

Internal Blower Installation

NOTE: Before turning the power on, make sure blower control is in the “OFF” position. Use wire connectors or wire nuts approved by UL or C/UL. Refer to installation instructions provided with each blower to verify wall or roof cut-outs.

NOTE: Blower options vary with the cooking surface. Use only a Wolf blower with the cooktop ventilation hood.

NOTE: For mounting and installation of the internal blower, refer to the specif c installation instructions provided with each blower.

1. Remove the hood f lters.
2. Lift the blower into position inside the hood, the threaded studs on the blower will slide through the slots provided in the upper panel.
3. Use four hex nuts provided with the blower to fasten the unit to four threaded studs. (See Figure 2-17)
4. Plug the blowers’ single power cord (double for some blowers) into the receptacle(s) inside the hood. Use the clip on the hood to keep excess power cord away from moving parts.
5. Reinstall the hood f lters.

NOTE: Before turning the power on, make sure the blower control is in the OFF position.

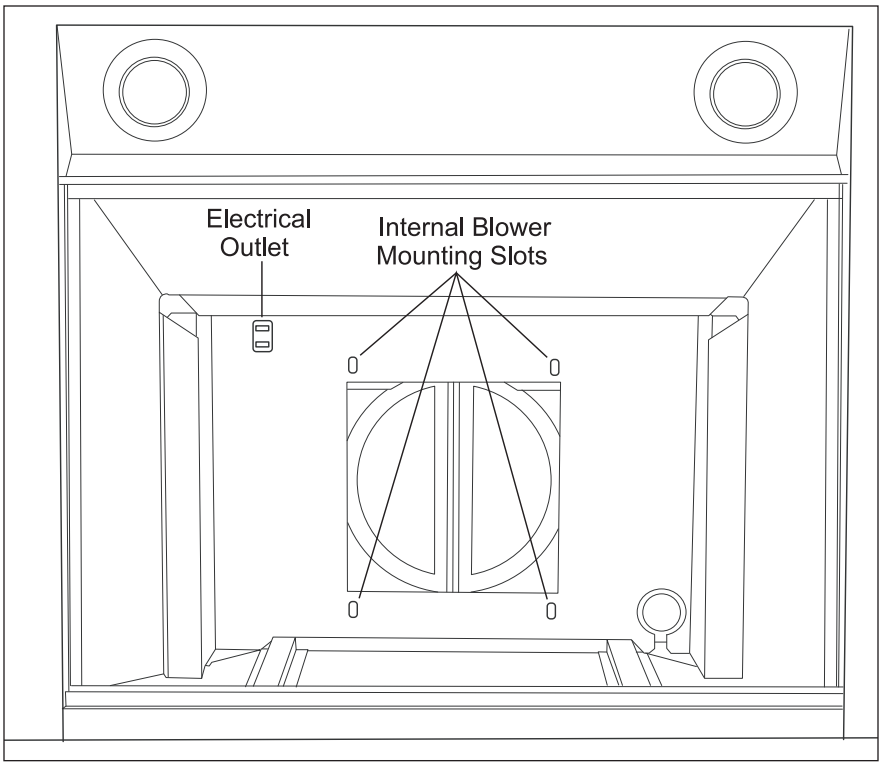

Figure 2-17 Internal Blower Install

Remote Blower Installation

⚠ WARNING

TO REDUCE THE RISK OF ELECTRICAL SHOCK, POWER SHOULD BE TURNED OFF TO UNIT BEFORE ATTEMPTING THE FOLLOWING PROCEDURE.

Remote Blower Installation

NOTE: Before turning the power on, make sure the blower is in the "OFF" position. Use wire connectors or wire nuts approved by UL or C/UL..

NOTE: Detailed instructions of Remote Blower installation are provided with the blower. Refer to installation instructions provided with each blower to verify wall or roof cut-outs. The following information is simply intended to summarize the process.

1. Locate the blower so the length of the duct run and number of elbows and transitions are kept to a minimum.
2. Where possible, blower should be located between wall studs or roof rafters.
3. Avoid pipes, wires or other ductwork that may be running through the wall.
4. Be sure that there is enough space for any transitions that may be needed between the blower and the connecting ductwork.
5. For best performance, locate transitions nearest the blower.

Connect Remote Blower

NOTE: Always refer to all blower installation instructions provided with the blower for additional mounting and wiring instructions.

1. Remove the cover from the front of the electrical box. Remove the electrical box knockout that faces the hood's discharge collar.
2. Disconnect the red, black or white wires using a f at-blade screwdriver. (See Figure 2-18)
3. Insert 6" (152) of the remote blower wiring through the knockout opening. Secure the cable to the electrical box with an appropriate connector. Use wire connectors or wire nuts approved by UL or C/UL.
4. Attach the remote blower wiring where the wires were removed in step 2. (See Figure 2-19)
5. Re-install wiring box cover and screws. Make sure all wires are secure and that no wires are pinched between cover and box.

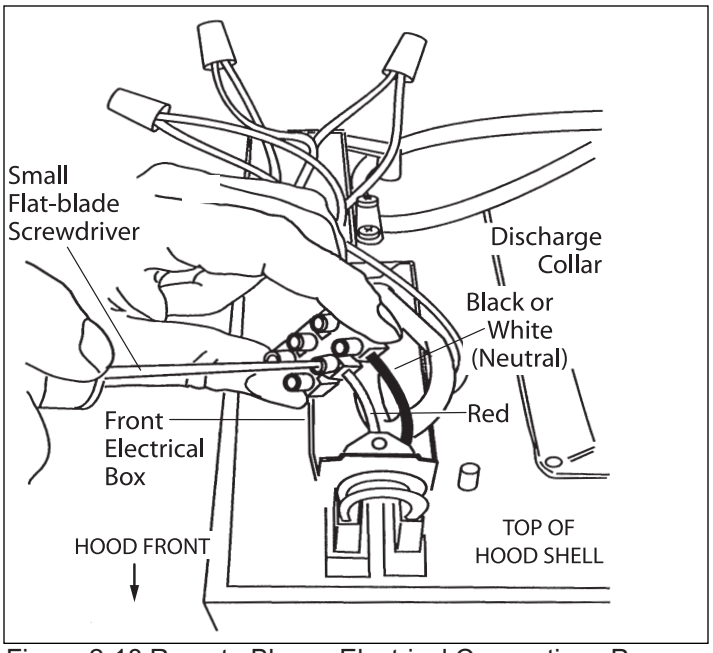

Figure 2-18 Remote Blower Electrical Connections Prepare

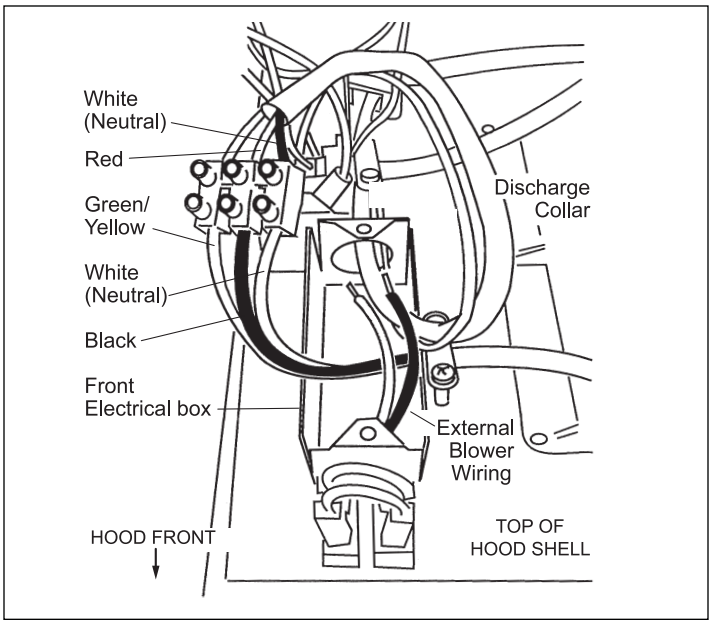

Figure 2-19 Remote Blower Electrical Connections

CTE Wall Hood Installation Considerations

⚠ WARNING

TO REDUCE THE RISK OF FIRE, USE ONLY METAL DUCTWORK.

⚠ CAUTION

TO REDUCE THE RISK OF FIRE AND ELECTRIC SHOCK, THIS VENTILATION HOOD SHOULD ONLY BE INSTALLED WITH BLOWERS MANUFACTURED BY WOLF APPLIANCE INC. AND SPECIFIED FOR USE WITH THESE VENTILATION MODELS.

Installation Options:

1. Ducted Installation.

   In a ducted installation, the hood aspirates the kitchen air saturated with fumes and odors, passes it through the grease f lter(s) and expels it to the outside through ductwork.
   For this installation, a hood with an internal,
   in-line or remote blower can be used. In-line blowers are located in ductwork between the hood and the outside. For wall hoods, the remote blower can be mounted on the roof or an exterior wall. Wolf in-line and remote blower assemblies are available through your Wolf dealer.

2. Recirculating Installation.

   In a recirculating installation, the hood aspirates the kitchen air saturated with fumes and odors, purif es it through the grease f lter(s) and charcoal f lter and returns clean air into the room. For constant eff ciency, the charcoal f lter must be replaced periodically. For this installation, a recirculation kit available through your Wolf dealer will be required.

   NOTE: For Installation instructions for Recirculating Option please see Installation Manual that was provided with the product.

Low-Profile Hood Installation Specifications and Preparations

Decide where the ductwork will run between the hood and the outside. A straight, short duct run will allow the hood to perform more eff ciently. Limit the number of elbows and transitions to as few as possible. Long duct runs, elbows and transitions will reduce the performance of the hood. Wolf recommends the maximum linear duct run be no greater than 50’ (15 m).

NOTE: There is a possibility of noise issues, if a short duct run is coupled with a remote blower.

Wolf recommends installing a backdraft damper in all installations. A backdraft damper is included with the hood. It is built into the transition from the hood to the duct run. Unless you are using a remote blower, a roof or wall cap should be installed. Connect ductwork to the cap and work back towards the hood. Use duct tape to seal the ductwork joints.

NOTE: Local building codes may require the use of make-up air. Consult a local HVAC professional for specif c requirements.

NOTE: Consult a qualif ed HVAC Engineer for specif c ducting applications.

Low-Profile Wall Hoods Installation Specifications and Preparations

NOTE: This installation must be completed by a qualif ed installer or Wolf authorized service center technician.

NOTE: Low Prof le Hoods are designed for use with a 6” diameter duct.

CTE Wall Hood Ducted Installation

1. Locate the electrical supply through the wall within the shaded area shown in Figure 23.
2. Install ductwork as outlined on page 2-13 & Figure 2-22.
3. If an optional backsplash is to be used, attach it to the f nished wall. Secure the hood mounting brackets to the wall studs prior to installing the backsplash.

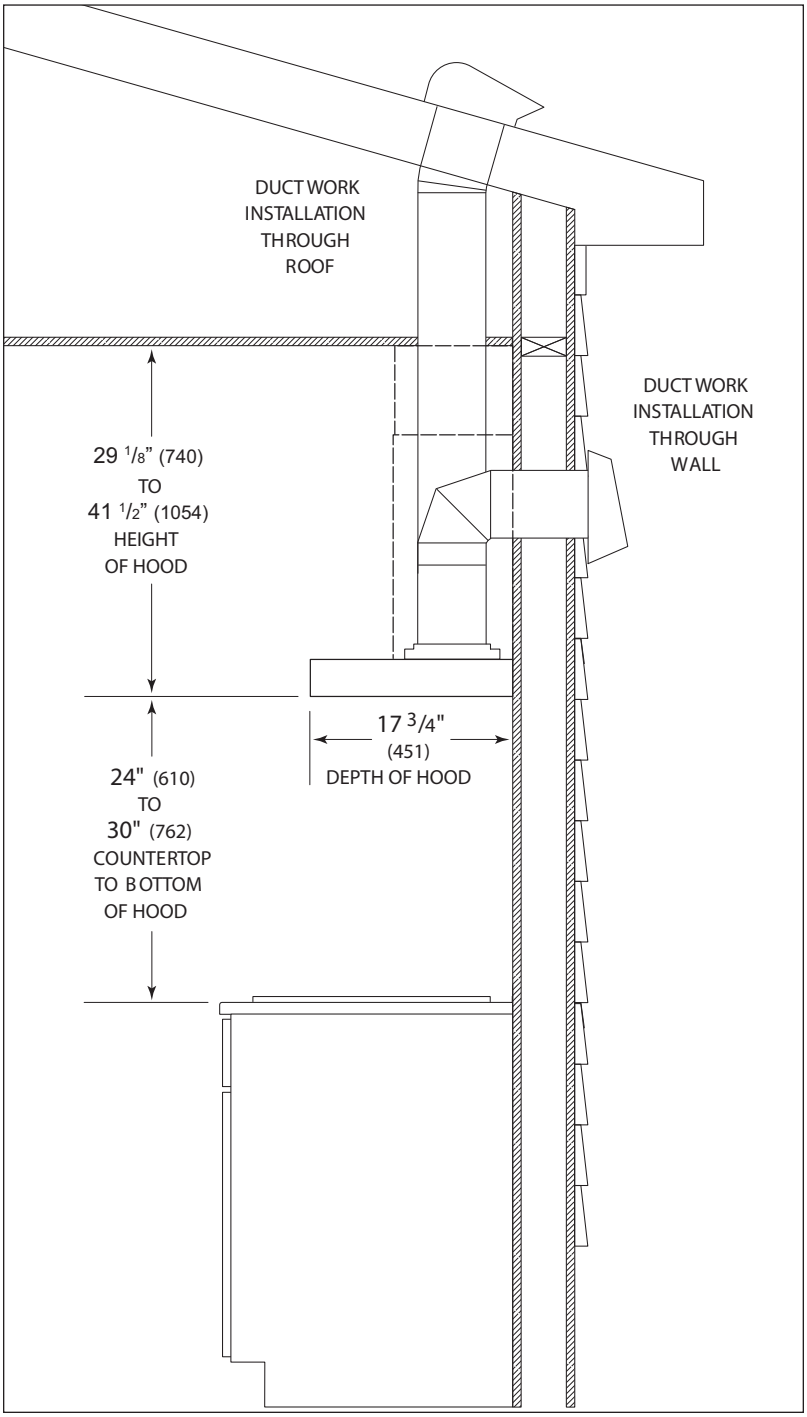

Figure 2-22 CTE Wall Hood Installation Considerations

Electrical Requirements

Wolf low-prof le hoods require a separate, grounded, 110/120 VAC, 60 Hz power supply. The service should have its own 15 amp circuit breaker.

NOTE: You must follow all National Electrical Code regulations. In addition, be aware of local codes and ordinances when installing your service.

Fixing to the Wall

1. Draw a line on the wall in vertical line with your hood. Mark the f rst two holes to be drilled in the wall, re-specting the distances indicated in Figure 23. Drill the two holes and f t the screw anchors provided.
2. For best capture of cooking impurities, the bottom of the hood should be a minimum of 24” (610) and a maximum of 30” (762) above **the countertop.**
3. Fix the metal bracket (A) to the wall using the two holes just drilled as shown in Figure 24. The screws for f xing the bracket are provided. Use the two cut-out triangles on the bracket to position it exactly along the vertical axis of the hood.
4. Hang the hood on the bracket as shown in Figure 25. Adjust the horizontal position moving the hood to the right or left so that it is aligned with the wall units. When adjustment has been completed, without removing the hood, mark the other four holes to be drilled (C) in the wall. Remove the hood and drill the holes marked (5/16” diameter). Then use the four screw anchors and the four screws provided for f nal f xing.
5. Mount the plate of the electrical system f xing it with three screws.

Fixing the Telescopic flue

1. Adjust the width of the support bracket (D) of the telescopic f ue by means of the screws (E) as shown in Figure 26. Then, by means of the screw anchors and screws (F) provided, f x the bracket to the ceiling in such a way that it is positioned along the axis with your hood.
2. Connect the air outlet pipe to the air vent of the hood. Use a f exible pipe and lock it to the air vent of the hood with a metal hose clamp as shown in Figure 27 (pipe and clamp are not provided).
3. For exhaust hoods, turn the upper f ue over so that the air exhaust grid is in the lower section.

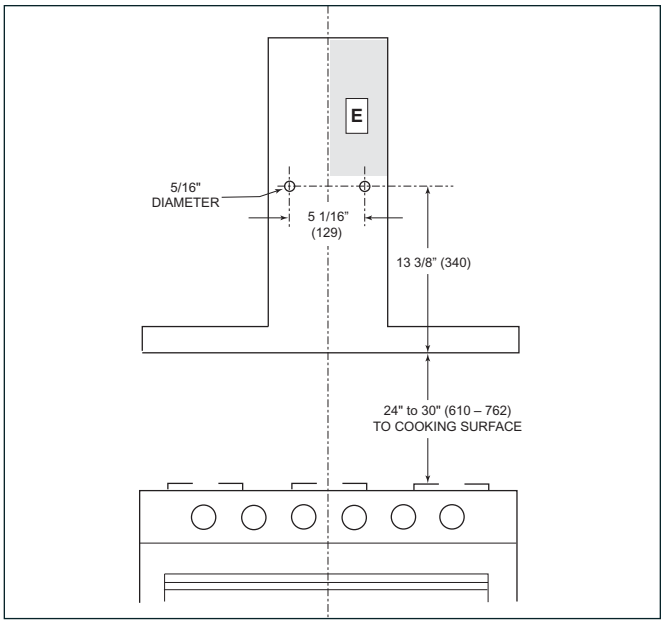

Figure 2-23 CTE Wall Hood Mounting Plate Placement

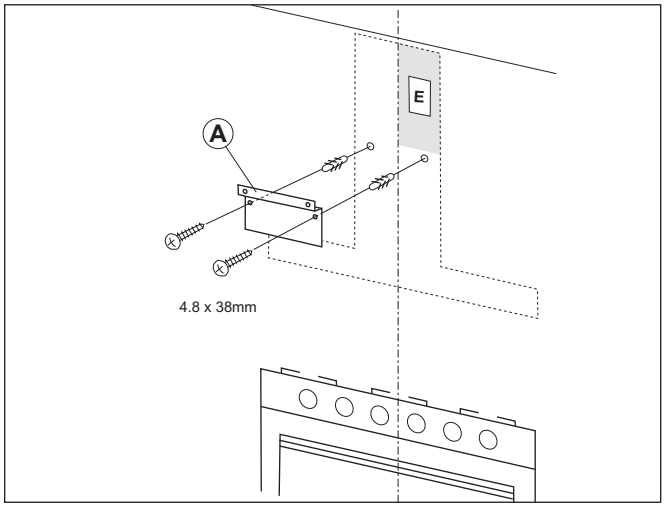

Figure 2-24 CTE Wall Hood Mounting Plate Mounting

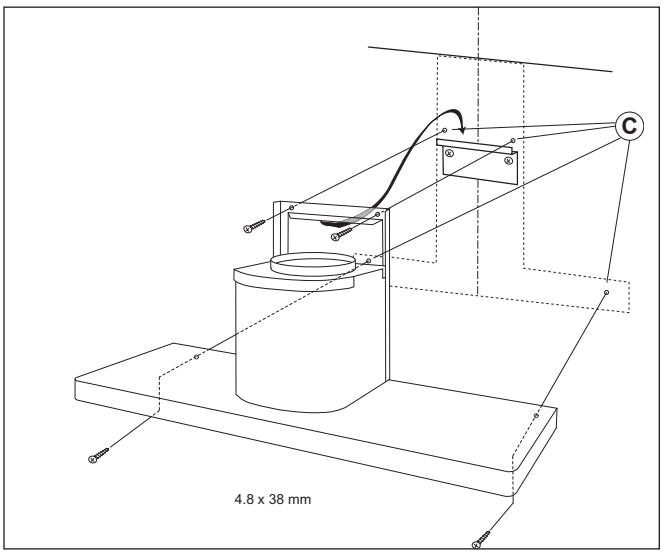

Figure 2-25 CTE Wall Hood Mounting

Wiring

NOTE: The ventilation hood must be properly grounded. It should be installed by a qualif ed electrician in accordance with all applicable national and local electrical codes.

1. Run supply conductors to the hood wiring box marked “120 V AC input”.
2. Remove the cover from the wiring box and remove one knockout as shown in Figure 28.
3. Secure the conduit to the wiring box through a conduit connector.
4. Make electrical connections at the hood. Connect white-to-white, black-to-black and green-to-ground.
5. Replace the wiring box cover and screws. Make sure wires are not pinched between the cover and box.

Final Step

Insert the f ue extensions setting them on the hood. Extend the upper f ue to the ceiling and secure with the two screws (H) as shown in Figure 29.

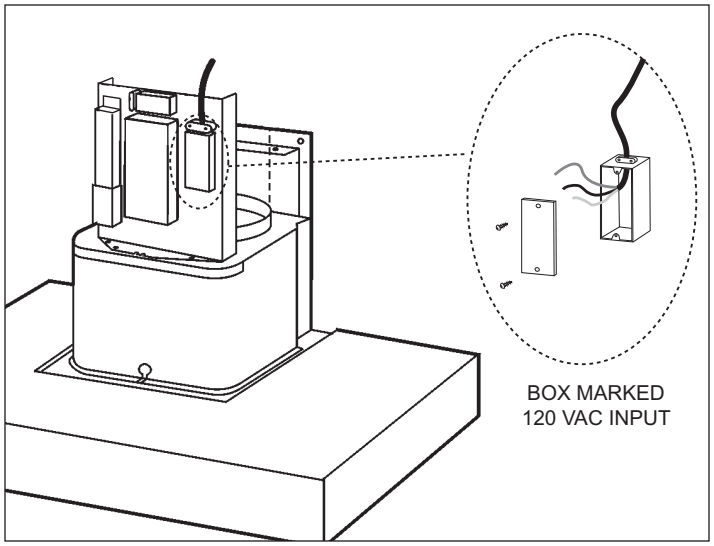

Figure 2-28 CTE Wall Hood Electrical Connection

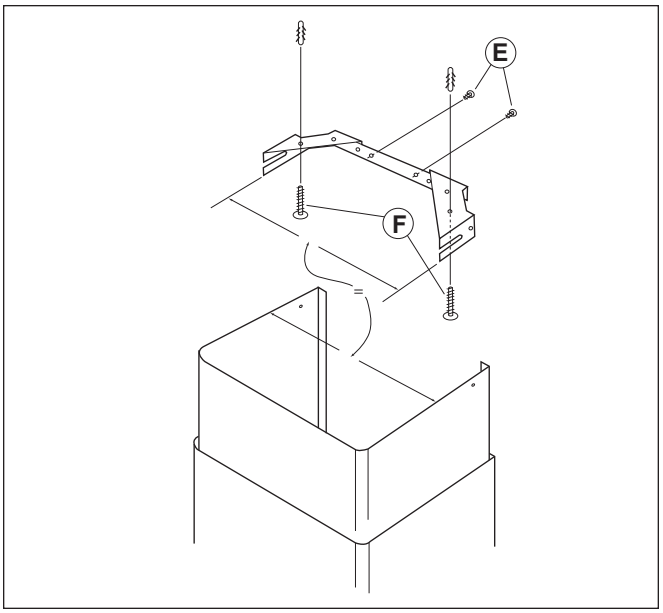

Figure 2-26 CTE Wall Hood Flue Support Bracket

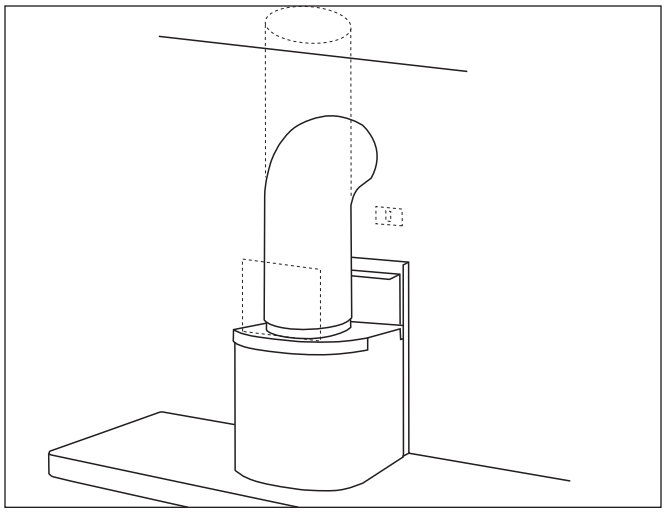

Figure 2-27 CTE Wall Hood Air Outlet Pipe

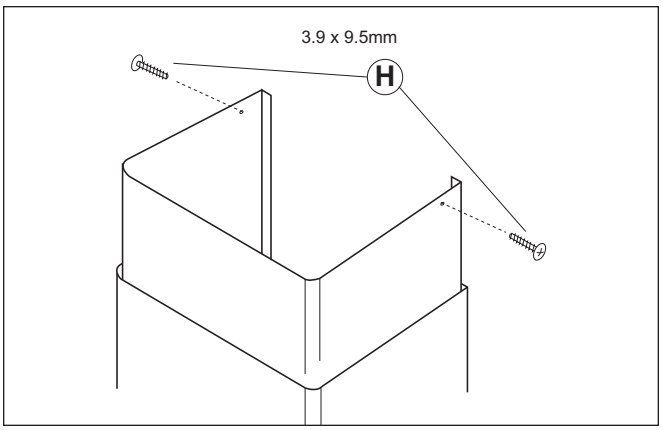

Figure 2-29 CTE Wall Hood Flue Securing

⚠ WARNING

TO REDUCE THE RISK OF FIRE, USE ONLY METAL DUCTWORK.

⚠ CAUTION

TO REDUCE THE RISK OF FIRE AND ELECTRIC SHOCK, THIS VENTILATION HOOD SHOULD ONLY BE INSTALLED WITH BLOWERS MANUFACTURED BY WOLF APPLIANCE INC. AND SPECIFIED FOR USE WITH THESE VENTILATION MODELS.

Low-Profile Island Hood Installation Specifications and Preparation

NOTE: This installation must be completed by a qualif ed installer or Wolf authorized service center technician.

1. Locate the electrical supply through the ceiling inside the area of the f ue.
2. Install ductwork as outlined on page 2-13 & Figure 2-30.

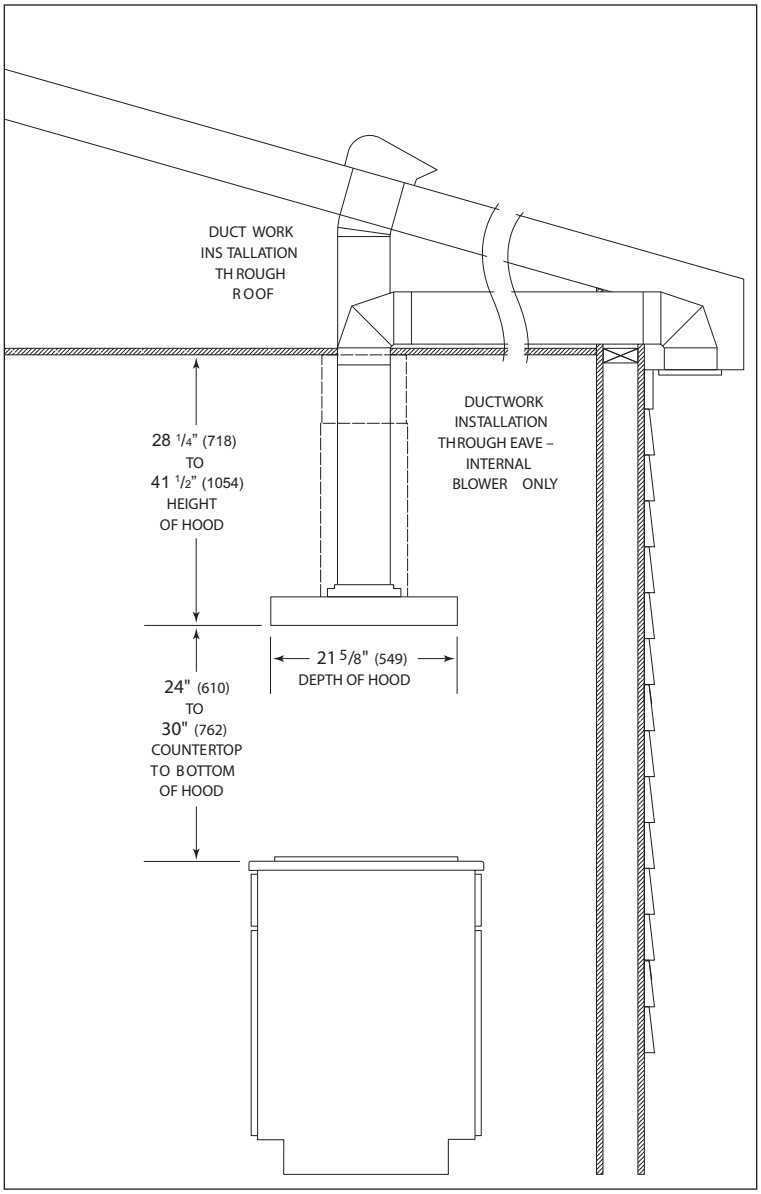

Figure 2-30 CTEI Hood Installation Considerations

CTE Island Hood Installation

Electrical Requirements

Wolf low-prof le hoods require a separate, grounded, 110/120 VAC, 60 Hz power supply. The service should have its own 15 amp circuit breaker.

NOTE: You must follow all National Electrical Code regulations. In addition, be aware of local codes and ordinances when installing your service.

Fixing to the Ceiling

1. Mount the metal panel with four screws as shown in Figure 31.
2. Using the drilling template, drill the holes for f xing to the ceiling on the vertical side of your hood. The center line of the mounting plate (Figure 32) is in line with the center of the control panel. Carefully observe this indication to ensure proper alignment of the hood with the cooking product.
3. Fix the bracket to the ceiling using the screws and screw anchors provided as shown in Figure 33.

NOTE: The position of the bracket determines the f nal position of the hood. The side with the slot (B) corresponds to the side opposite the controls.

4. Assemble the plate of the electrical system f xing it with two screws and two metal washers as shown in Figure 34.
5. Fix the telescopic f ue to the bracket by means of four screws (provided), running the air evacuation pipe through the telescopic f ue and the electric power cable through the special hole in the bracket as shown in Figure 35.
6. Adjust the height of the telescopic f ue by means of the four retaining screws (C) shown in Figure 35. Take into account that the height of the hood is 3 1/8” (79) and the bottom of the hood should be a minimum of 24” (610) and a maximum of 30” (762) above the counter-top.
7. Take the upper f ue (with the round slots) and slide it on the telescopic f ue with the slots facing upwards. Attach the f ue to the bracket with two screws as shown in Figure 36.
8. Take the lower f ue and slide it over the upper f ue, to the top and secure it in that position using adhesive tape.
9. Raise the hood to the telescopic f ue and connect the air outlet duct to the hood. Attach the hood to the telescopic f ue by means of four screws (provided) as shown in Figure 37.

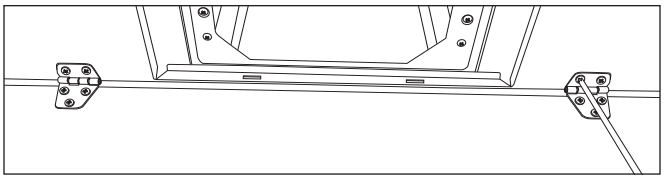

Figure 2-31 CTE Island Hood Metal Panel Mounting

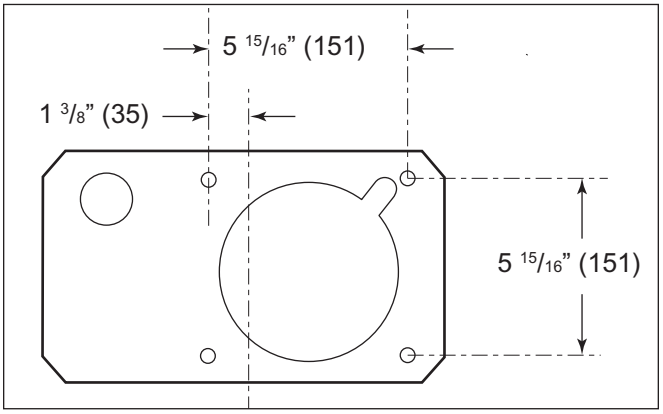

Figure 2-32 CTE Island Hood Plate Dimensions

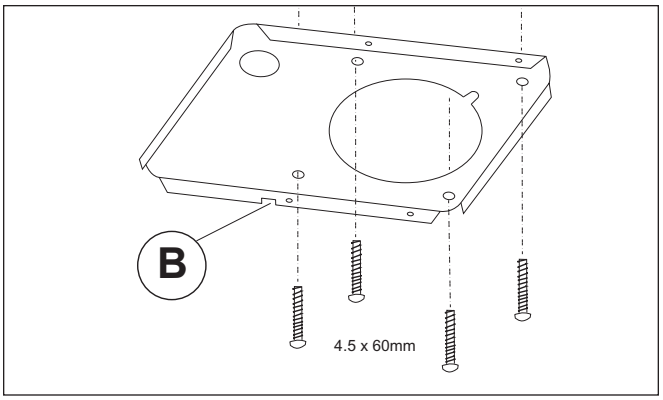

Figure 2-33 CTE Island Hood Ceiling Plate Mounting

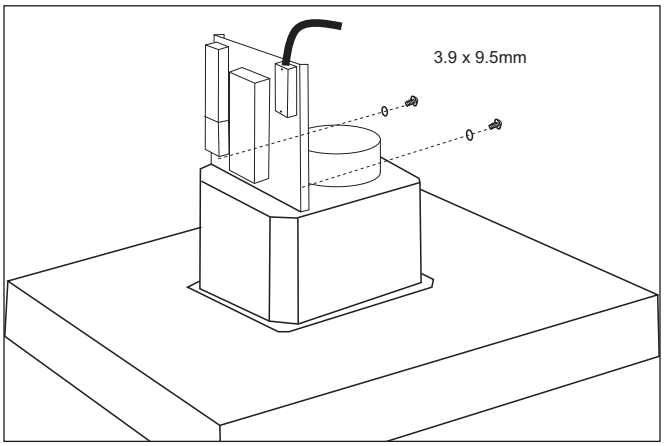

Figure 2-34 CTE Island Hood Control Plate

Wiring

NOTE: The ventilation hood must be properly grounded. It should be installed by a qualif ed electrician in accordance with all applicable national and local electrical codes.

1. Run supply conductors to the hood wiring box marked “120 V AC input”.
2. Remove the cover from the wiring box and remove one knockout as shown in Figure 38.
3. Secure the conduit to the wiring box through a conduit connector.
4. Make electrical connections at the hood. Connect white-to-white, black-to-black and green-to-ground.
5. Replace the wiring box cover and screws. Make sure wires are not pinched between the cover and box.

Final Step

Remove the adhesive tape and slide the lower f ue downward, placing it gently onto the hood base. Installation is now complete and the grease f lters can be installed.

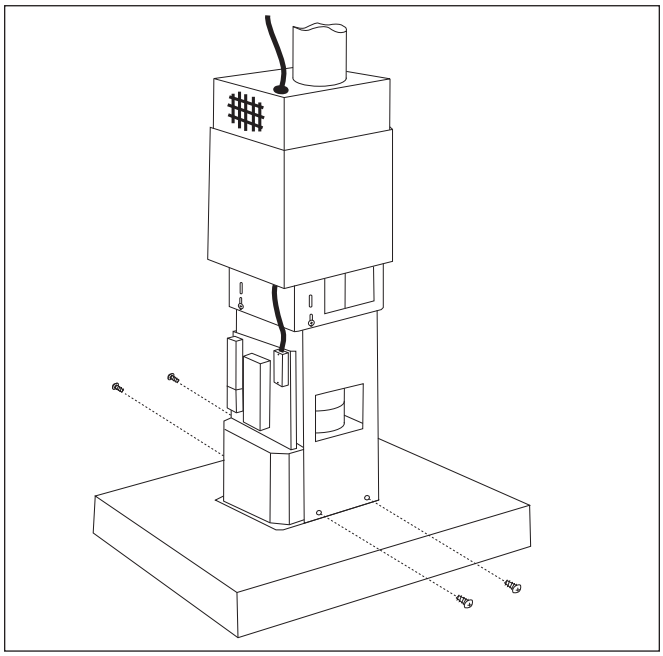

Figure 2-37 CTE Island Hood to Telescopic Flue

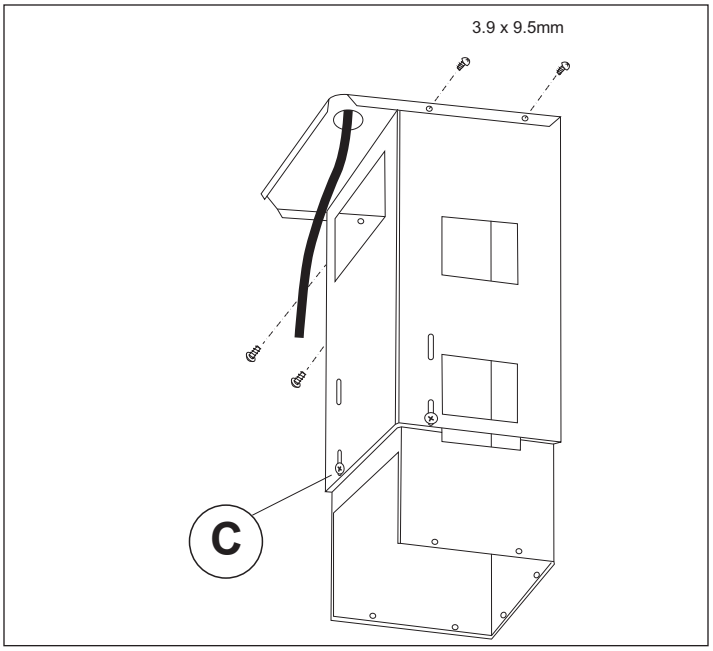

Figure 2-35 CTE Island Hood Telescopic Flue Mounting

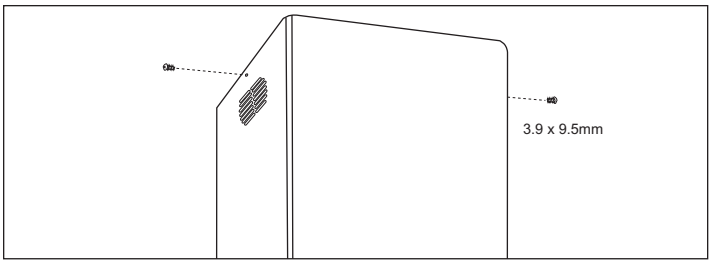

Figure 2-36 CTE Island Hood Upper Flue Mounting

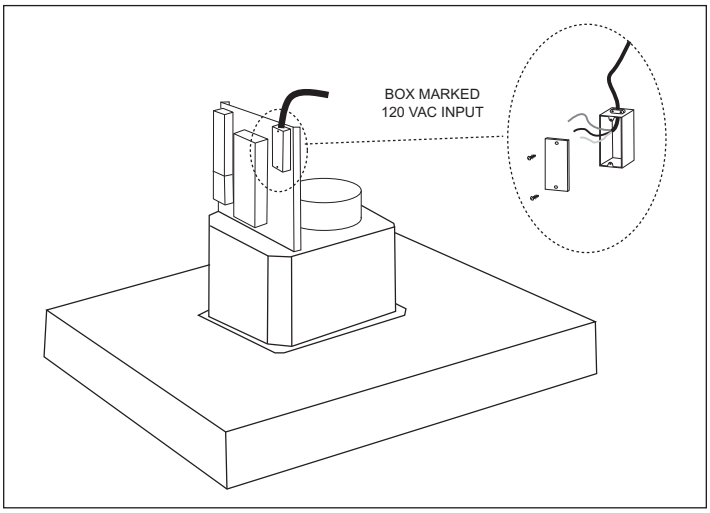

Figure 2-38 CTE Island Hood Electric Hookup

Remote Blower Installation

⚠ WARNING

TO REDUCE THE RISK OF ELECTRICAL SHOCK, POWER SHOULD BE TURNED OFF TO UNIT BEFORE ATTEMPTING THE FOLLOWING PROCEDURE.

Remote Blower Installation

NOTE: Before turning the power on, make sure the blower is in the "OFF" position. Use wire connectors or wire nuts approved by UL or C/UL..

NOTE: Detailed instructions of Remote Blower installation are provided with the blower. Refer to installation instructions provided with each blower to verify wall or roof cut-outs. The following information is simply intended to summarize the process.

1. Locate the blower so the length of the duct run and number of elbows and transitions are kept to a minimum.
2. Where possible, blower should be located between wall studs or roof rafters.
3. Avoid pipes, wires or other ductwork that may be running through the wall.
4. Be sure that there is enough space for any transitions that may be needed between the blower and the connecting ductwork.
5. For best performance, locate transitions nearest the blower.

Connect Remote Blower

NOTE: Always refer to all blower installation instructions provided with the blower for additional mounting and wiring instructions.

1. Remove the cover from the front of the electrical box. Remove the electrical box knockout that faces the hood's discharge collar.
2. Disconnect the red, black or white wires using a f at-blade screwdriver. (See Figure 2-39)
3. Insert 6" (152) of the remote blower wiring through the knockout opening. Secure the cable to the electrical box with an appropriate connector. Use wire connectors or wire nuts approved by UL or C/UL.
4. Attach the remote blower wiring where the wires were removed in step 2. (See Figure 2-40)
5. Re-install wiring box cover and screws. Make sure all wires are secure and that no wires are pinched between cover and box.

NOTE: Before turning the power on to the ventilation hood, make sure the blower is in the OFF position.

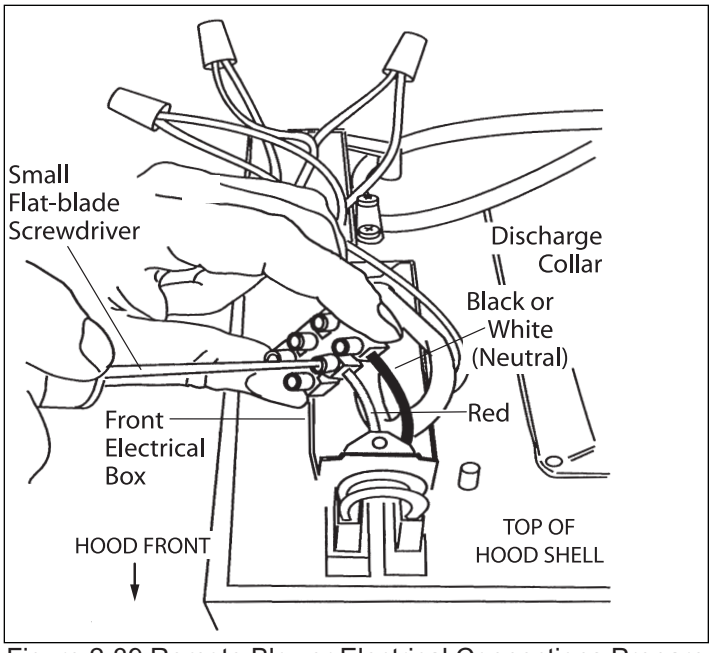

Figure 2-39 Remote Blower Electrical Connections Prepare

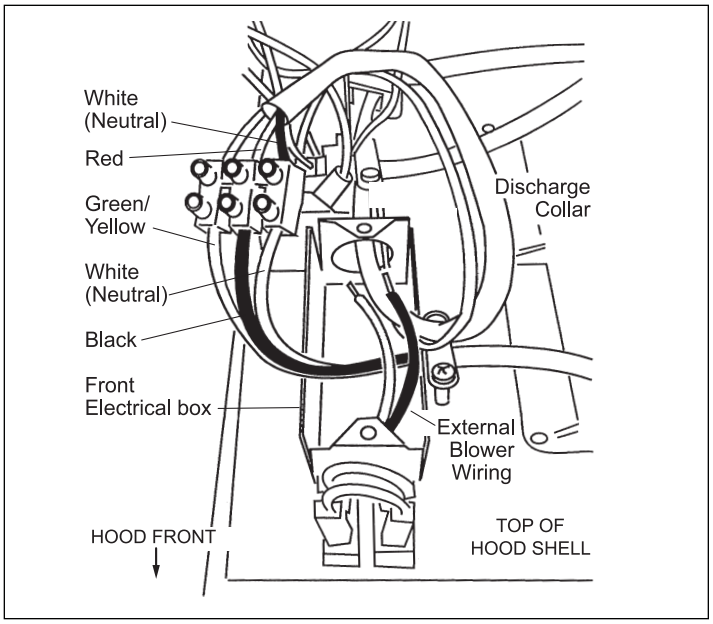

Figure 2-40 Remote Blower Electrical Connections

Electronic Control for Cooktop Wall Hoods

Wolf ventilation hoods utilize a 6 button control panel with LED indicators, that is mounted along the right front edge of the unit. (See Figure 3-1)

The ***LIGHT*** button turns the halogen lights on and off, and allows the user to choose from three lighting levels, high, medium and low.

The ***HIGH***, ***MEDIUM*** and ***LOW*** buttons control the operational speed of the remote or internal blower. An LED indicator below the button indicates the speed of blower operation.

To turn the blower off, depress the button over the illuminated LED.

The ***DELAY*** button activates the delay feature which allows the blower to continue running at the selected speed for programmed time period after the button is depressed.

When in Delay mode both the Delay LED and the corresponding blower speed LED will be illuminated.

If the blower is on high speed when the Delay mode is activated, the blower will continue to run at high speed for 5 minutes. The blower will then run at low speed for 5 minutes before turning off.

If the blower is on medium speed when the Delay mode is activated, the blower will continue to run at medium speed for 5 minutes. The blower will then run at low speed for 5 minutes before turning off.

If the blower is on low speed when the Delay mode is activated, the blower will continue to run at low speed for 5 minutes and then turn off.

If the ***DELAY*** button is depressed when the blower is off, no action will take place.

If the ***DELAY*** button is pressed when the unit is already in delay mode, the delay mode will be cancelled.

The ***FILTER*** button monitors the use of the hood. After 30 hours of use at medium speed the Filter LED will illuminate. The filters should be removed and cleaned. Depress the Filter button to reset the Filter clean LED.

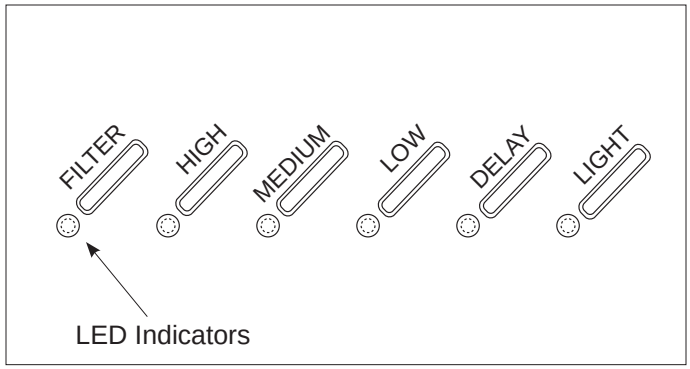

Figure 3-1 Controls (Wall and Island Hoods)

Heat Sentry Mode

Heat Sentry Mode is always in wait and is activated when exhaust temperature from hood reaches 206 F (97 C). When this temperature is reached the blower motor speed will automatically adjust to the next highest speed or turn on if the blower motor was off. The LED of the corresponding blower speed will flash on and off to indicate Heat Sentry Mode.

Once in Heat Sentry Mode, the hood will continue to monitor exhaust temperatures every three minutes. If exhaust temperature is at or exceeds 206F (97C) blower speed will be increased to the next highest speed and the corresponding LED will begin to flash. If after three minutes the exhaust temperature falls below 174F (79C), blower speed will decrease to the next lowest speed. If the blower was off prior to Heat Sentry Mode, the unit will turn off when exiting Heat Sentry Mode.

When blower speed returns to original setting prior to Heat Sentry Mode activation, the corresponding LED will stop flashing and remain constant.

Electronic Control for Low Profile Hoods

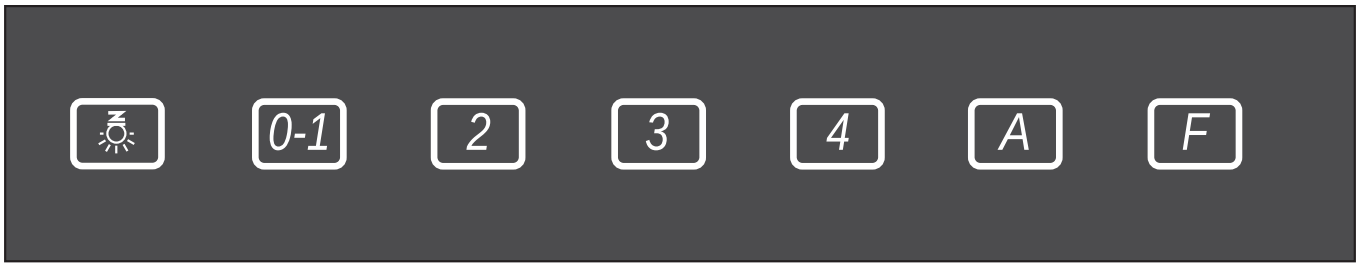

Figure 3-3 Controls For Low Profile (Wall and Island Hoods)

The Wolf cooktop low-profile hood is operated using the touch control pads on the front face of the hood. (Figure 3)

- LIGHTS. Touch the pad once to turn the lights ON, touch a second time to turn the lights ON to a brighter level and touch a third time to turn the lights OFF.

0-1 - Touch activates the blower motor at the first speed (icon is illuminated). Press the pad for about two seconds to turn the blower OFF.

2 - Activates the blower at the second speed.

3 - Activates the blower at the third speed.

4 - Activates the blower at the fourth speed.

A - Touch the pad to set a TIMER which keeps the blower operating at the current speed for 10 minutes.

F - FILTER. After 30 hours of operation, the icon is illuminated to indicate that the grease filter(s) must be cleaned. After 120 hours, the icon flashes to indicate that the grease filter(s) must be cleaned and the charcoal filter replaced. To reset the hour counter, touch (F) while the icon is illuminated or flashing.

Component Access and Removal

This section explains how to access and remove components from Wolf Pro Series ventilation products.

An attempt has been made to arrange these procedures in such a way as to simulate which components would need to be removed first in order to gain access to other components. When following a component removal procedure, it may be necessary to reference another component removal procedure listed earlier in this section.

This section is divided into two sections, the first section covers Models CTWH30, CTWH36 and Model IH4227. Section two covers Downdraft Models DD30I/R, DD36I/R and DD45I/R.

NOTE: Before continuing, please take note of the WARNINGS and CAUTIONS below.

⚠ WARNING

TO AVOID ELECTRIC SHOCK, POWER TO A VENTILATION UNIT MUST BE DISCONNECTED WHENEVER ACCESSING AND/OR REMOVING COMPONENTS POWERED BY ELECTRICITY OR COMPONENTS NEAR OTHER ELECTRICAL COMPONENTS.

IF IT IS NECESSARY TO REMOVE A VENTILATION UNIT FROM ITS INSTALLATION, REMEMBER THAT THEY ARE HEAVY AND COULD FALL RESULTING IN SERIOUS INJURY OR DEATH. PULLING A UNIT FROM ITS INSTALLATION SHOULD ONLY BE PERFORMED BY A TRAINED AUTHORIZED SERVICE TECHNICIAN OR INSTALLER.

⚠ CAUTION

Metal edges may be sharp. Use caution when servicing unit to avoid personal injury.

Component Access And Removal for Models CTWH & IH

Filter Removal

NOTE: See Caution at the beginning of this section.

From the underside of wall hood, grab onto f lter handle and push back against the spring retainer, then pull down and out of the wall hood. (See Figure 4-1)

⚠ CAUTION

Make sure bulb is cool before touching. Halogen bulbs get hot instantly and adjacent parts may retain heat.

Do not touch replacement bulb with bare hands. Use a paper towel or cloth when handling bulb to keep oil from f ngers from touching bulb.

Halogen Bulb and Light Assembly Removal

NOTE: See Caution above.

The halogen bulb may be removed without removing the lamp assembly. With a small f at bladed screwdriver or f ngernails, pry out metal retaining clip securing the lens to the lamp assembly, using care not to damage the retainer or lens. (See Figure 4-2)

The halogen bulb has two metal electrodes that press into the socket of the lamp assembly.

To remove the light assembly, the f lters must be removed f rst, then (See Figure 4-3):

1. Reach inside of hood cavity behind lamp assembly, depress the retaining clips and push lamp assembly through lamp-holder support.
2. Turn lamp assembly 90 degrees and slide lamp assembly through the clearance slots cut in the lamp-holder support.
3. With wire cutters, cut wire leads leading to lamp assembly.
4. Splice wires from new lamp assembly to wire harness. Use shrink wrap to seal wire splice.

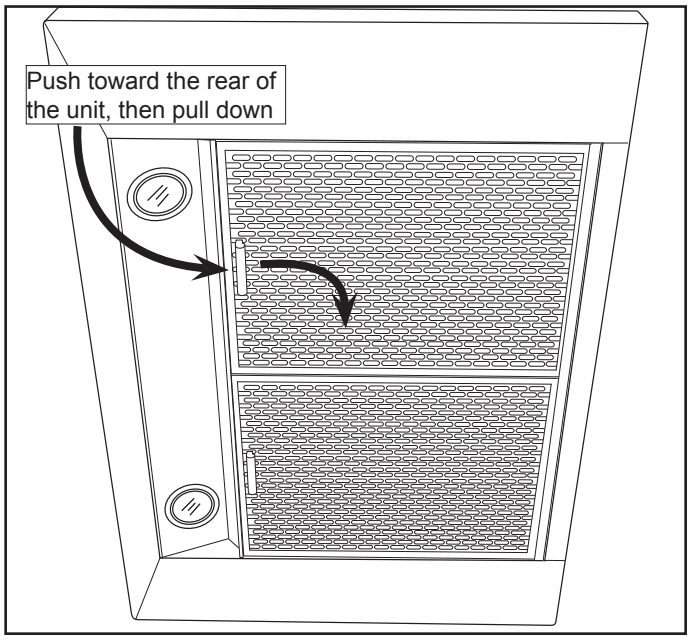

Figure 4-1 Filter Removal

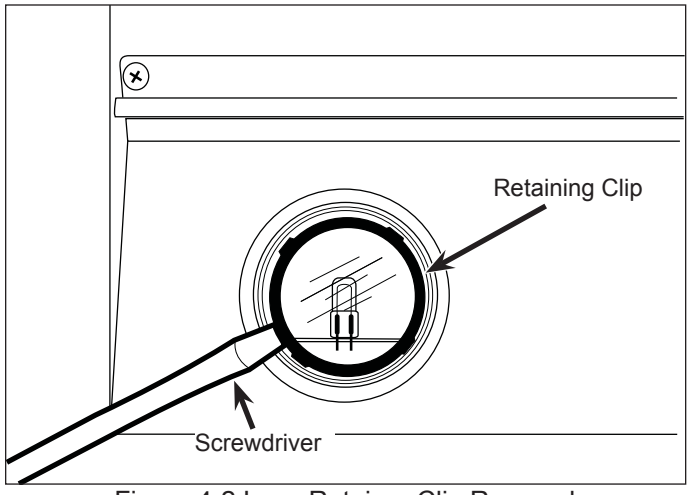

Figure 4-2 Lens Retainer Clip Removal

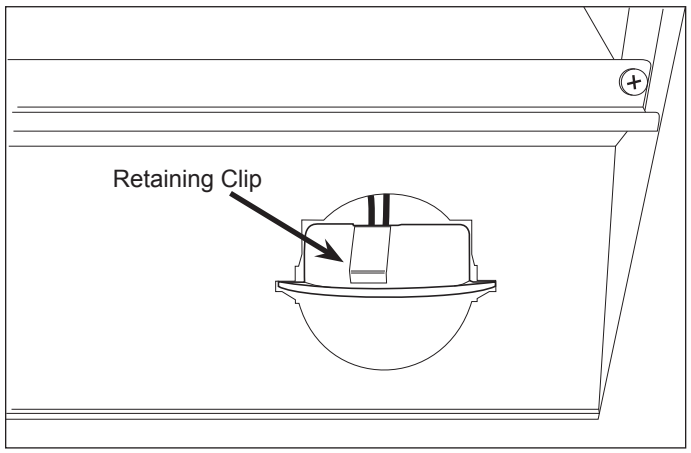

Figure 4-3 Lamp Assembly Removal

⚠ WARNING

TO AVOID ELECTRIC SHOCK, POWER TO THE VENTILATION UNIT MUST BE DISCONNECTED WHENEVER PERFORMING THE FOLLOWING REPAIRS.

Heat Sentry Removal

NOTE: Refer to all WARNINGS and CAUTIONS at beginning of this section.

The heat sentry is located behind the lamp-holder support and is held in place by a retaining clip.

The heat sentry will activate when the exhaust temperature reaches 206°F (97°C), signaling the blower motor to start or increase to the next highest speed. The corresponding LED will f ash on and off to indicate Heat Sentry Mode.

To remove the heat sentry, the f lters must be removed f rst, then (See f gure 4-4):

1. Reach inside hood cavity on backside of lamp-holder support, locate the heat sentry and pull out from under retaining clip.
2. Disconnect wire leads from heat sentry.

Lamp-holder Support Removal

The lamp-holder support provides a mounting surface for the lamp-holder assemblies and heat sentry. The front edge of the lamp-holder support has tabs that f t into slots formed in the wall hood frame, while two screws in the opposite corners secure the support to the wall hood.

To remove the lamp-holder support, the f lters, heat sentry and the lamp assemblies must be removed f rst, (See Figure 4-4):

1. Extract screws from corners of lamp-holder support. (See Figure 4-4)
2. Pull lamp-holder support away from front edge of wall hood until tabs release from slots, and remove from unit.

User Interface Switch Mounting Bracket Removal

The user interface switch is mounted to a bracket that is located on the front right side of the wall hood. Screws secure the mounting bracket to the interior of the wall hood cavity.

To remove the user interface switch mounting bracket, the f lters and lamp-holder support must be removed f rst, then (See Figures 4-5 & 4-6):

1. Extract the screws securing the user interface switch mounting bracket to the wall hood frame.
2. Pull control panel assembly out of wall hood.
3. Extract screws securing user interface switch to mounting bracket.

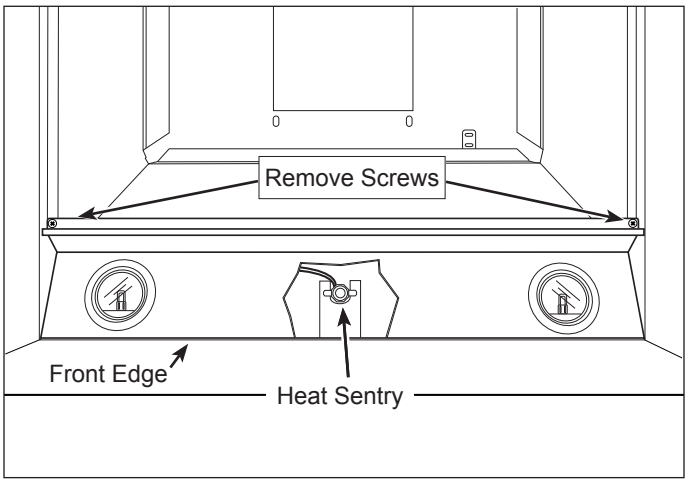

Figure 4-4 Lamp-holder Support Removal

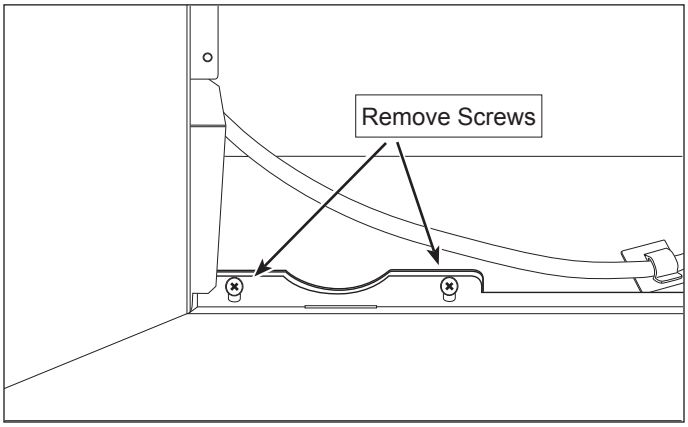

Figure 4-5 Control Panel Bracket Removal

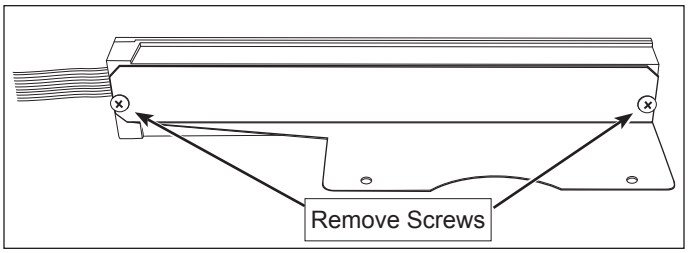

Figure 4-6 Removing Control From Bracket

⚠ WARNING

TO AVOID ELECTRIC SHOCK, POWER TO THE VENTILATION UNIT MUST BE DISCONNECTED WHENEVER PERFORMING THE FOLLOWING REPAIRS.

Ribbon Cable Removal

NOTE: Refer to all WARNINGS and CAUTIONS at beginning of this section.

The user interface switch consists of a plastic housing which contains the circuit board and push buttons, and a clear plastic plate that secures the push buttons in place and captivates the control ribbon. Screws secure the clear plastic plate to the housing.

To remove the control ribbon and/or to replace the circuit board, the f lters, lamp holder support and the user interface switch mounting bracket must be removed f rst, then (See Figure 4-7):

1. Extract the screws securing the clear plastic plate to the housing.
2. Lift control circuit board out of housing.
3. With thumb and foref nger, grasp the ribbon cable connector and disconnect from circuit board.

Power Outlet Removal

NOTE: Refer to all WARNINGS and CAUTIONS at beginning of this section.

To access the power outlet the lower section of the telescoping chimney f ue must be raised off of the hood and temporarily secured in place. The outlets are located on the top left front of the hood frame and are secured in place with spring clips.

To remove the power outlets, (See Figure 4-8):

1. Raise lower section of chimney f ue off of hood frame and temporarily secure in position.
2. Disconnect electrical leads from outlet.
3. With f ngers, depress spring clips on sides of outlet and push through hood frame.

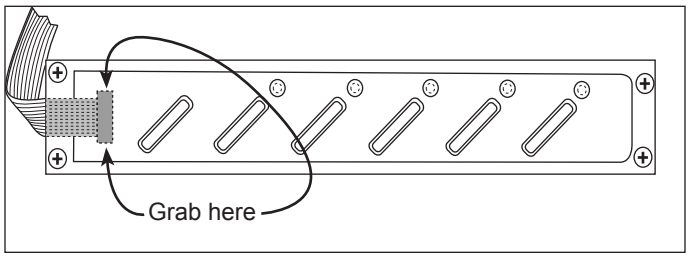

Figure 4-7 User Interface Switch Bracket Removal

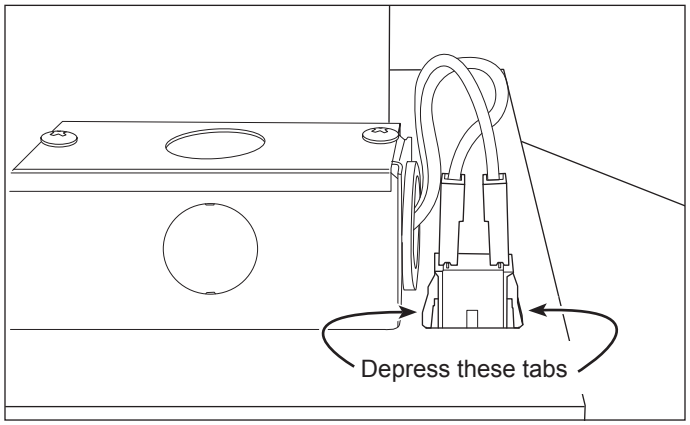

Figure 4-8 Power Outlet Removal

⚠ WARNING

TO AVOID ELECTRIC SHOCK, POWER TO THE VENTILATION UNIT MUST BE DISCONNECTED WHENEVER PERFORMING THE FOLLOWING REPAIRS.

Transformer Removal

NOTE: Refer to all WARNINGS and CAUTIONS at beginning of this section.

To access the transformer the lower section of the telescoping chimney f ue must be raised off of the hood and temporarily secured in place. The transformer is located on the top right side of the hood frame and is secured to the hood with screws.

To replace the transformer, (See Figure 4-9 & 4-10):

1. Raise lower section of chimney f ue off of hood frame and temporarily secure in position.
2. Extract screws securing the transformer wire cover to transformer and remove from unit.
3. With a f at bladed screwdriver, loosen set screws securing wires to transformer terminals. Pull wire leads out of transformer.
4. Extract screw from front of transformer. Slide transformer out from under mounting bracket.

Fuse Removal

NOTE: Electrical shock hazard. Refer to WARNING at beginning of section.

To access the fuse the lower section of the telescoping chimney f ue must be raised off of the hood and temporarily secured in place. The control box is located on the upper right side of the hood frame. The fuse is located in a fuse holder inside the control box.

To remove the fuse,

1. Raise lower section of chimney f ue off of hood frame and temporarily secure in position.
2. Extract screws securing the control panel cover to control box and remove cover. (See Figure 4-11)
3. Grasp top section of fuse holder with f ngers and turn counterclockwise. Pull cap and fuse out of fuse holder. (See Figure 4-12)

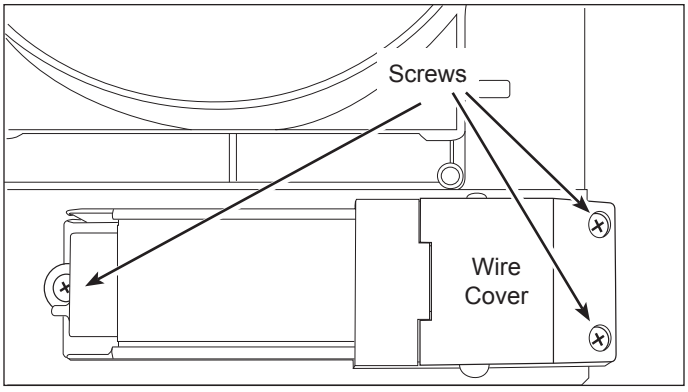

Figure 4-9 Transformer Removal

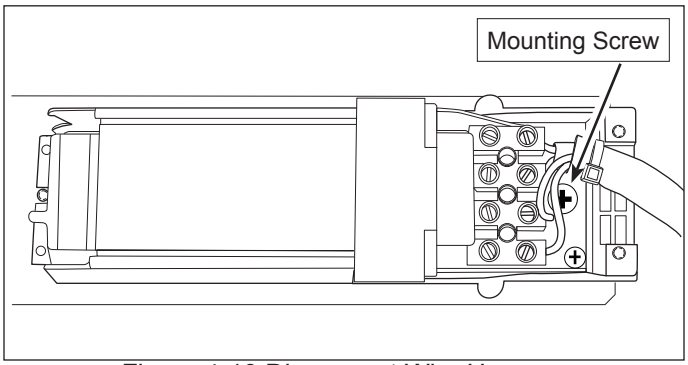

Figure 4-10 Disconnect Wire Harness

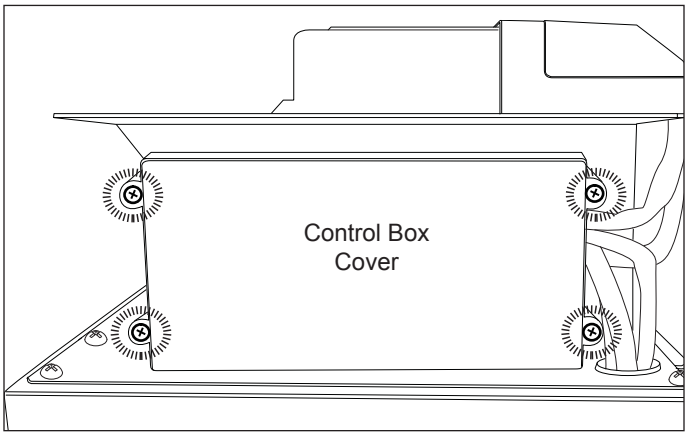

Figure 4-11 Control Box Cover Removal

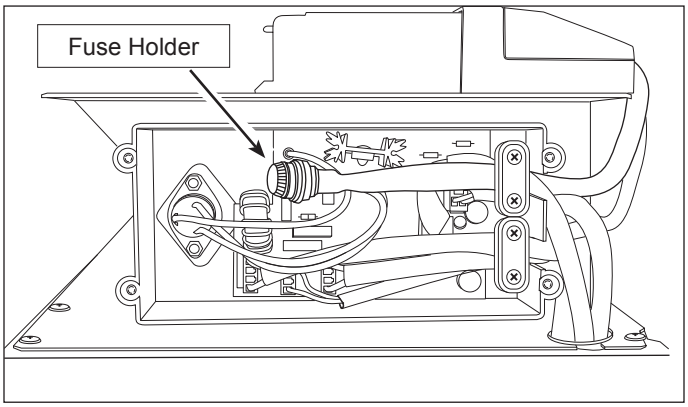

Figure 4-12 Fuse Removal

Component Access And Removal for Model CTEW

⚠ WARNING

TO AVOID ELECTRIC SHOCK, POWER TO THE VENTILATION UNIT MUST BE DISCONNECTED WHENEVER PERFORMING THE FOLLOWING REPAIRS.

⚠ CAUTION

- MAKE SURE BULB IS COOL BEFORE TOUCHING. HALOGEN BULBS GET HOT INSTANTLY AND ADJACENT PARTS MAY RETAIN HEAT.
- DO NOT TOUCH REPLACEMENT BULB WITH BARE HANDS. USE A PAPER TOWEL OR CLOTH WHEN HANDLING BULB TO KEEP OIL FROM FINGERS FROM TOUCHING BULB.

Halogen Bulb Removal

NOTE: See Caution above.

The halogen bulb may be removed without removing the lamp assembly. With a small f at bladed screwdriver or f ngernails, pry out metal retaining clip securing the lens to the lamp assembly, using care not to damage the retainer or lens. (See Figure 13)

The halogen bulb has two metal electrodes that press into the socket of the lamp assembly.

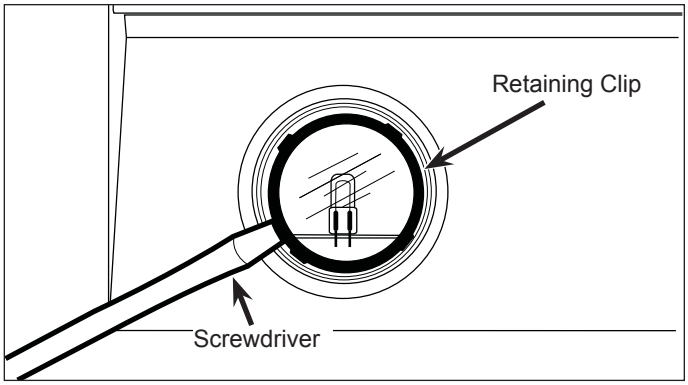

Figure 4-13 Bulb Lens Removal

Filter Removal

1. Lower the drop plate by pulling down on the front edge to dislodge it from the snap fasteners and allow it to hinge down and back.
2. Place one f nger under the f lter latch and pivot the latch forward and down until the front of the f lter is allowed to freely drop out of the f lter opening.
3. Lean the f lter down and out of the 2 slots in the back of the f lter opening. (Figure 14)

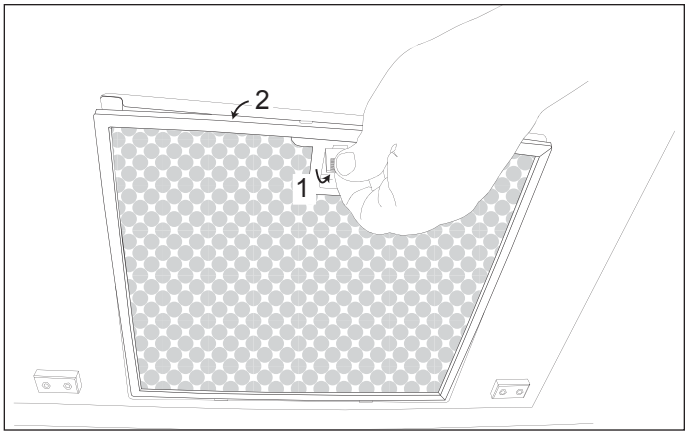

Figure 4-14 Filter Removal

Drop Plate Removal

1. Pull down on the front edge of the drop plate to dislodge it from the snap fasteners.
2. Using a Phillips screw driver, remove the (4) hinge screws as shown in Figure 15.

NOTE: To prevent damage, you will need to support the plate with one hand while removing the screws with the other.

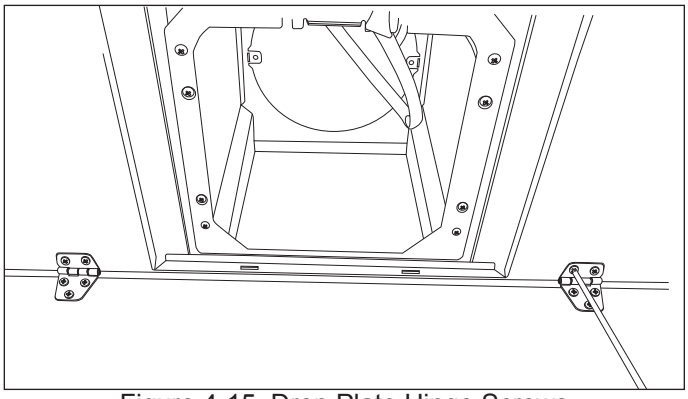

Figure 4-15 Drop Plate Hinge Screws

Hood Inner Panel Removal

1. Remove Drop Plate and Filter(s). (See previous page)

⚠ CAUTION

ALWAYS WEAR GLOVES WHEN HANDLING SHEET METAL DUE TO THE POSSIBILITY OF SHARP EDGES.

Hood Inner Panel Removal (cont.)

⚠ WARNING

TO AVOID ELECTRIC SHOCK, POWER TO THE VENTILATION UNIT MUST BE DISCONNECTED WHENEVER PERFORMING THE FOLLOWING REPAIRS.

2. Locate the (3) screws fastening the front of the shroud to the hood frame. Using a Phillips screw driver, remove the screws as shown in Figure 4-16.

NOTE: To prevent damage, you will need to support the panel with one hand while removing the screws with the other.

3. Locate the (3) screws fastening the back of the panel to the hood frame. Using a Phillips screw driver, remove the screws as shown in Figure 17.
4. Slowly lower the panel until the molex plug for the Heat Sentry (see Figure 16) is exposed and disconnect plug.

Lamp Socket Removal

1. To remove the light Socket assembly, the drop plate, f lters and inner shroud must f rst be removed (See procedures above).
2. Disconnect Molex plug for the Lamp Socket that you are going to remove.
3. Reach inside of hood cavity above the lamp assembly and depress the retaining clips and push lamp assembly through lamp-holder support.

NOTE: If necessary, turn lamp assembly until you can slide lamp assembly through the clearance slots cut in opening in the hood.

Control Panel Removal

1. To remove the Control Panel, the drop plate, f lters and inner shroud must f rst be removed (See procedures above).
2. Disconnect Communication Cable from the back of the Control Panel. (Figure 19)
3. Locate and remove the screws that fasten the Control panel to the hood.

NOTE: The screws (2 for Wall Hoods, 4 for Island Hoods) are the only fasteners used to hold the Control Panel to the Hood. Control Panel will fall if not supported as screws are removed.

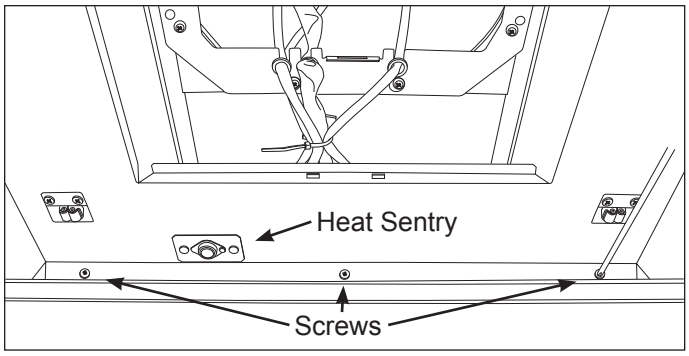

Figure 4-16 Inner Panel Front Screws

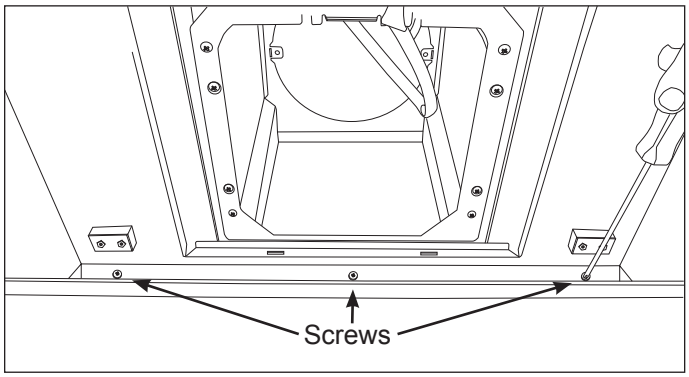

Figure 4-17 Inner Panel Rear Screws

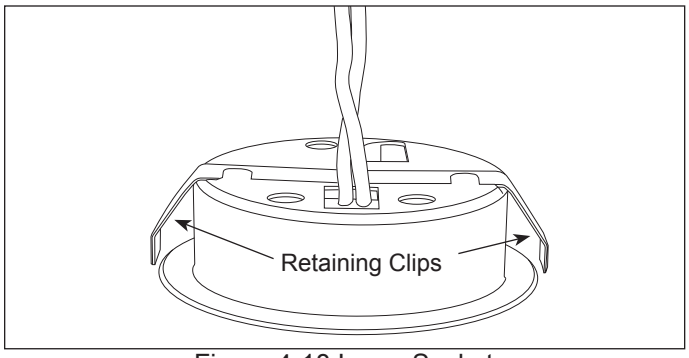

Figure 4-18 Lamp Socket

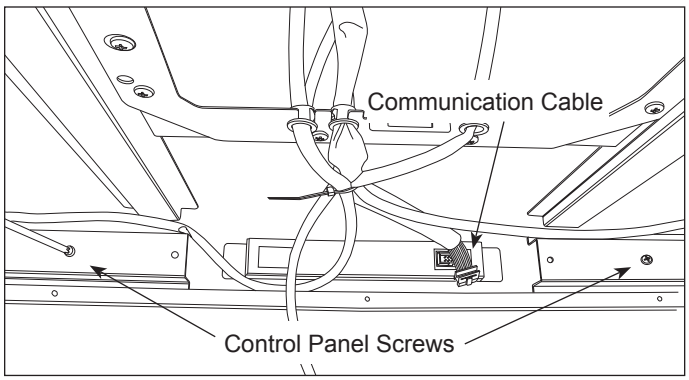

Figure 4-19 Control Panel Removal

⚠ WARNING

TO AVOID ELECTRIC SHOCK, POWER TO THE VENTILATION UNIT MUST BE DISCONNECTED WHENEVER PERFORMING THE FOLLOWING REPAIRS.

⚠ CAUTION

ALWAYS WEAR GLOVES WHEN HANDLING SHEET METAL DUE TO THE POSSIBILITY OF SHARP EDGES.

Internal Blower Removal

1. Disconnect electrical supply. (see WARNING above)

   NOTE: For Island Hood Internal Blower Removal Skip to Step 6. Motor connector located inside motor housing and should be disconnected there.

2. Slide the bottom section of chimney f ue up to gain access to the controls. (See Figure 20)
3. Remove the Control Board housing cover, cable clamp and cable tie that secure the motor harness. Unplug CN1 by gripping the connector and pulling straight out. (See Figure 21)
4. Remove the nut from the grounding stud and free the blower ground wire. (See Figure 21)
5. Feed the blower wire harness and ground wire down through the wire routing hole. (See Figure 22)
6. Remove the Drop Plate and Filter(s) (Page 4-7).
7. Remove the Inner Panel.

   NOTE: Do not forget to unplug Heat Sentry once Inner Plate screws are removed.

8. Remove screws (4) that fasten the bottom bracket to the hood. (See Figure 4-23)

(Continued on next page)

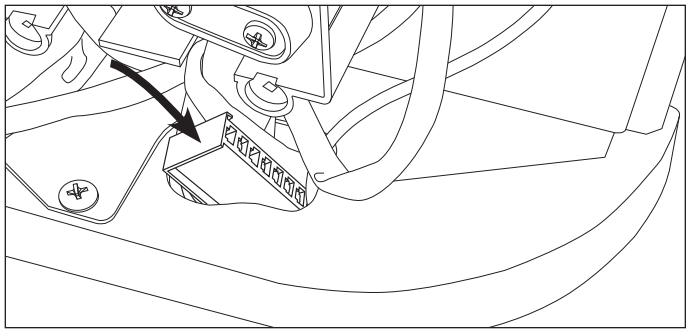

Figure 4-22 Connector

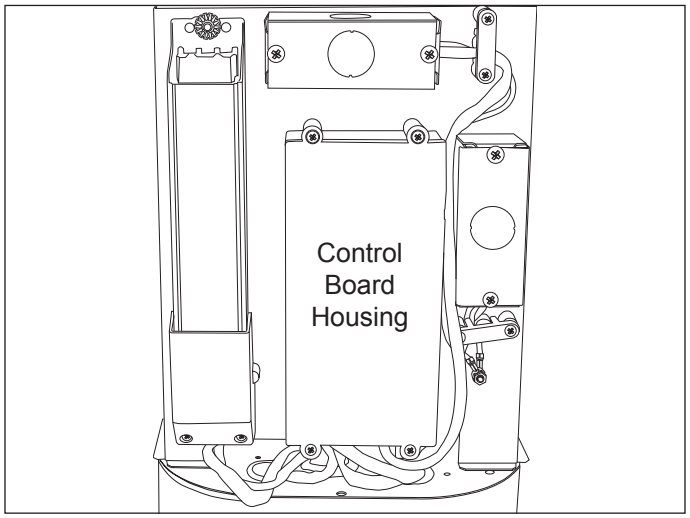

Figure 4-20 Control Panel Location

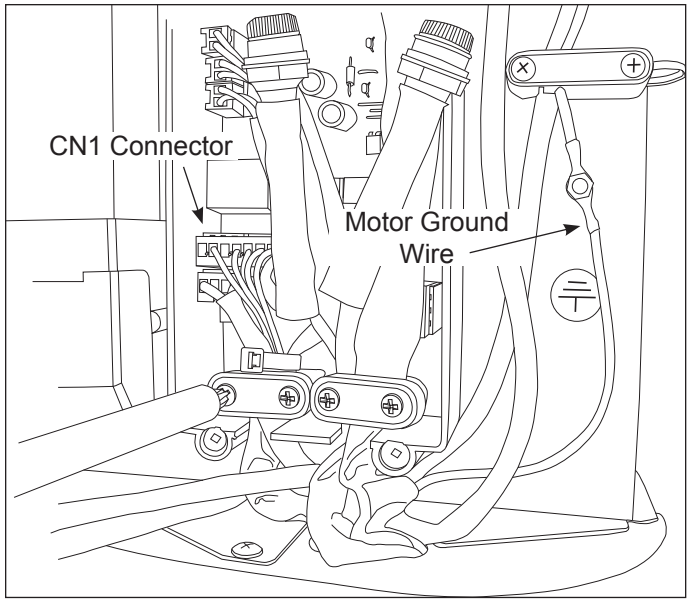

Figure 4-21 Motor Connector and Ground Wire

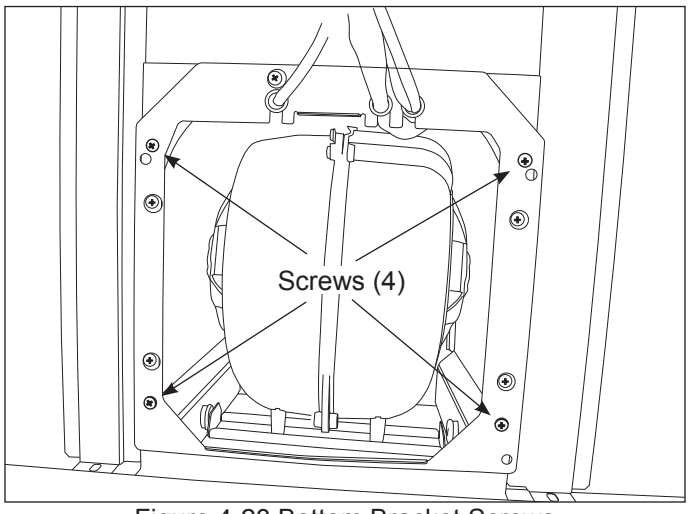

Figure 4-23 Bottom Bracket Screws

Internal Blower Removal (continued)

9. Remove the wing-nuts on either side of the blower housing. (See Figure 24)
10. While supporting the blower, remove the screws (Figure 25). Once the screws are removed the blower can be lowered out of the hood.

    NOTE: You will need to rotate the blower assembly slightly within the hood to attain the correct orientation for removal.

    NOTE: Do not lose the tubular screw spacers that are inside of the rubber mounts. These spacers prevent the possibility of crushing the rubber mount during reinstallation.

⚠ WARNING

TO AVOID ELECTRIC SHOCK, POWER TO THE VENTILATION UNIT MUST BE DISCONNECTED WHENEVER PERFORMING THE FOLLOWING REPAIRS.

⚠ CAUTION

ALWAYS WEAR GLOVES WHEN HANDLING SHEET METAL DUE TO THE POSSIBILITY OF SHARP EDGES.

Control Board Removal

1. Disconnect electrical supply. (see WARNING above)
2. Slide the bottom section of chimney f ue up to gain access to the controls. (See Figure 20)
3. Remove the Control Board housing cover and unplug electrical connectors.

    NOTE: Mark wire connectors as you remove them to insure proper connection on replacement board.

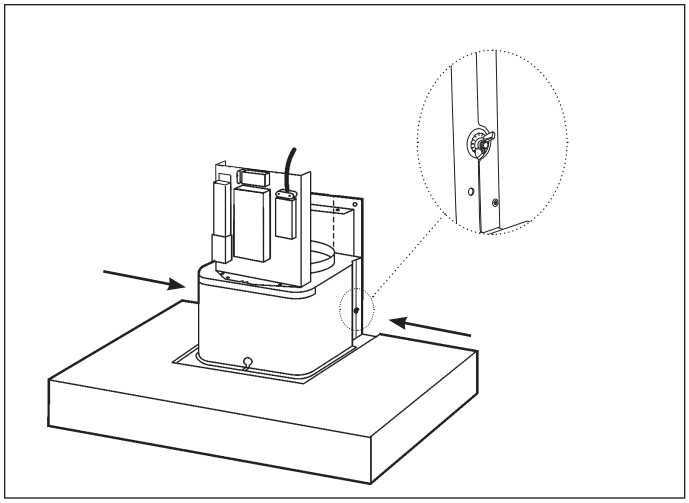

Figure 4-24 Blower Mounting Wing-nuts

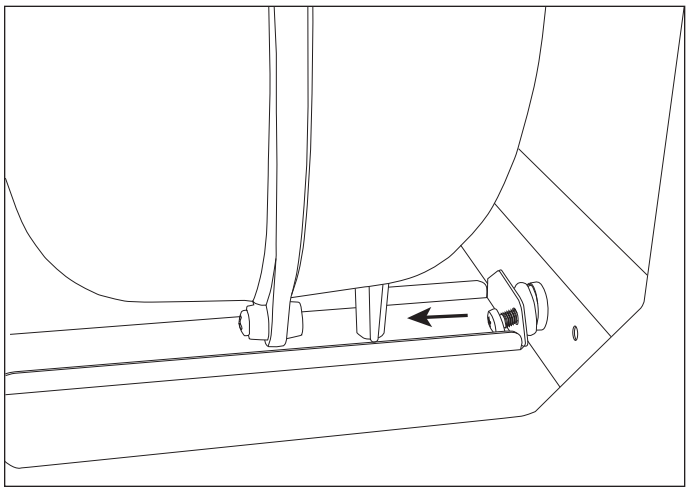

Figure 4-25 Blower Mounting Screws

INTRODUCTION

This Wolf Cooktop and Downdraft Ventilation Technical Service Manual, has been compiled with information provided by Broan-Nu Tone LLC. This manual provides the most recent technical service information that will enable the service technician to troubleshoot and diagnose malfunctions, perform necessary repairs and return a Wolf Ventilation product to proper operational condition.

The service technician should read the complete instructions contained in this Service Manual before initiating any repairs on a Wolf Appliance.

IMPORTANT SAFETY INFORMATION

Below are the Product Safety Labels used in this manual.

The “Signal Words” used are **WARNING** & **CAUTION.**

Please note that these safety labels are placed in areas where awareness of personal safety and product safety should be taken and lists the precautions to be taken when the signal word is observed.

⚠ WARNING

TO AVOID ELECTRIC SHOCK, POWER TO A VENTILATION UNIT MUST BE DISCONNECTED WHENEVER ACCESSING AND/OR REMOVING COMPONENTS POWERED BY ELECTRICITY OR COMPONENTS NEAR OTHER ELECTRICAL COMPONENTS.

SOME OF THE FOLLOWING TESTS MUST BE PERFORMED WITH THE ELECTRICAL POWER TURNED ON - THESE TESTS SHOULD ONLY BE PERFORMED BY A QUALIFIED SERVICE TECHNICIAN THAT HAS BEEN TRAINED IN SAFE PRACTICES FOR DIAGNOSING LIVE ELECTRICAL CIRCUITS.

⚠ CAUTION

Sheet metal components may have sharp edges - Gloves should be worn to protect against cuts when handling sheet metal parts.

VENTILATION TROUBLESHOOTING

CTWH & IH		
Symptom	**Diagnostic Test**	**Resolution**
Lights do not light	Check for incoming power to hood at CN2 (Black & White)	If no voltage reset power supply breaker
	Check Bulbs for continuity	Replace if defective
	“Light” LED illuminated on touch control with light selected.	If not illuminated replace Touch Control
	Check Lighting Fuse for continuity	Replace if defective
	Check for 120 VAC at CN3 (plugged in) with lights turned on	If no voltage replace Control Board
		If voltage present - check for 120 VAC at Lighting Transformer - if no voltage change harness
	Check for 12 VAC at Lighting Transformer	If no 12 VAC replace transformer
Blower does not shut off	Unit is above 174°F (79°C)	Allow unit to cool down.
	Remote blower wired improperly	See Wiring Section for proper connection
	Check continuity of Heat Sentry w/CN5 disconnected from Control Board.	If there is continuity replace Heat Sentry
		If no continuity Replace Control Board
Blower does not run	If internal blower - make sure blower is plugged in.	Plug blower in.
	Remote blower wired improperly	See Wiring Section for proper connection.
	Disconnect CN4 and check for motor continuity and ground	If no continuity verify wiring correct and no broken wires
		Replace motor if it is open or grounded
	LED is not illuminated on touch control of selected speed	Change touch control
	Check for appropriate voltage at CN4 for selected speed w/CN4 plugged in. (see Tech Data Section)	Improper or no voltage: replace Control Board
Hood does not move enough air	Correct Ducting installation	See Ventilation Specs for proper duct size - verify entire run is correct including wall/ roof cap
	Make-up air may be required for adequate operation	Open a window and if unit draws more then make-up air is inadequate
	Incorrect blower installed	See Ventilation Specifications

Low-Profile		
Symptom	**Possible Cause**	**Action Required**
Fan does not operate with switch on.	No power to the unit	Plug in power cord or reset power supply breaker
	Defective Control Board	Check for Voltage at CN1 terminals on Cntl Brd
	Defective Fan Motor	Check Continuity of Fan Motor - Replace if defective.
	Defective Wiring	Replace Wire Harness
Fan runs but does not move enough air.	Improper Installation	Verify that duct was properly sized and no obstructions are present
		Verify tape was removed from damper during installation
		Verify a compatible Wolf blower is installed
		Verify adequate make-up air present
	Filters are soiled	Clean or Replace Filters
	Defective Control Board	Verify correct voltage output at control board
	Defective Motor	Verify correct amperage draw
Lights do not work.	Defective Bulb	Check bulb for continuity and place if defective
		Replace bulb with known good bulb
	Defective Fuse	Check fuse for continuity and place if defective
		Replace fuse with known good bulb
	Defective Control Board	Verify voltage output at board and replace board if voltage not present
Fan cycles on and off.	Motor overheating	Check for obstructions in ducting or fan blade obstructions
	Defective Control Board	Verify if voltage at Control Board is cycling at same rate - replace if it is cycling.

⚠ WARNING

TO AVOID ELECTRIC SHOCK, POWER TO A VENTILATION UNIT MUST BE DISCONNECTED WHENEVER ACCESSING AND/OR REMOVING COMPONENTS POWERED BY ELECTRICITY OR COMPONENTS NEAR OTHER ELECTRICAL COMPONENTS.

⚠ CAUTION

Metal edges may be sharp. Use caution when servicing unit to avoid personal injury.

Supply Voltage Requirements

Model CTWH ..... 120 VAC / 60 Hz. / 15 amp
Model IH ..... 120 VAC / 60 Hz. / 15 amp
Model DD ..... 120 VAC / 60 Hz. / 15 amp
Model ICBDD ..... 240 VAC 50/60Hz. / 10 amp
Model CTEW & CTEI ... 120 VAC/ 60Hz. / 15 amp

Temperature Parameters

Heat Sentry Activation Temperature:

Closes 206°F (97°C)
Opens - 174°F (79°C)

Component Output Levels Domestic CT Hoods & Downdraft

Speed Control: Low: 68+/-5 VAC-RMS
Medium: 80+/-5 VAC-RMS
High: 116 VAC-RMS, Minimum

Lighting Transformer	Primary	Secondary
Low	30 VAC	3 VAC
Medium	60 VAC	6 VAC
High	120 VAC	12 VAC

DD 500 Cfm Internal Blower Rating: 4.0 amps

Speed Output Levels ICBDD

Speed Control (50Hz): Low: 97+/-10 VAC
Medium: 121+/-10 VAC
High: 230 VAC, Minimum
Speed Control (60Hz): Low: 137+/-10 VAC
Medium: 158+/-10 VAC
High: 230 VAC, Minimum

CTE Low Profile Hoods Fuse Specifications

Function	Location	Rating
12V Control	Control Board	250V 4amp
Lighting	Harness Fuse Holders .	250V 630mA

Speed Output Levels CTE Low Profile Hoods

Speed Control: Level 1: 63 +/-3 VAC
Level 2: 69 +/-3 VAC
Level 3: 78 +/-3 VAC
Level 4: 114 +/-3 VAC

NOTE: Measured at Power Board (Printed Circuit Board) motor connector

Component Output Levels CTE Low Profile Hoods

Component (command level)	**Control Board Test Point**	**Wire Color** (if applicable)	**Expected Voltage Reading @ 120V/60Hz**	**Expected Amperage Reading @ 120V/60Hz**
Transformer Primary (stand-by)	CN6	n/a	120V	0.29A
Transformer Secondary (stand-by)	CN5	n/a	13.08V	0.03A
Input Power (stand-by)	CN7	n/a	120V	0.29A
Halogen Lamp (1/2 light)	CN3	n/a	6.25V	2.18A
Halogen Lamp (max light)	CN3	n/a	11.44V	11.44A
Halogen Lamp (1/2 light)	CN2	n/a	6.25V	2.18A
Halogen Lamp (max light)	CN2	n/a	11.44V	11.44A
Blower Output (speed 4)	CN1	Red/Black	120V	2.78A
Blower Output (speed 3)	CN1	Red/Orange	120V	2.72A
Blower Output (speed 2)	CN1	Red/White	120V	2.26A
Blower Output (speed 1)	CN1	Red/Blue	120V	1.88A

MODEL CTWH30 WIRING DIAGRAM

WIRING DIAGRAM

⚠ WARNING

- This wiring information is provided for use by qualified service personnel only.
- Disconnect appliance from electrical supply before beginning service.
- Be sure all grounding devices are connected when service is complete.
- Failure to observe the above warnings may result in severe electrical shock.

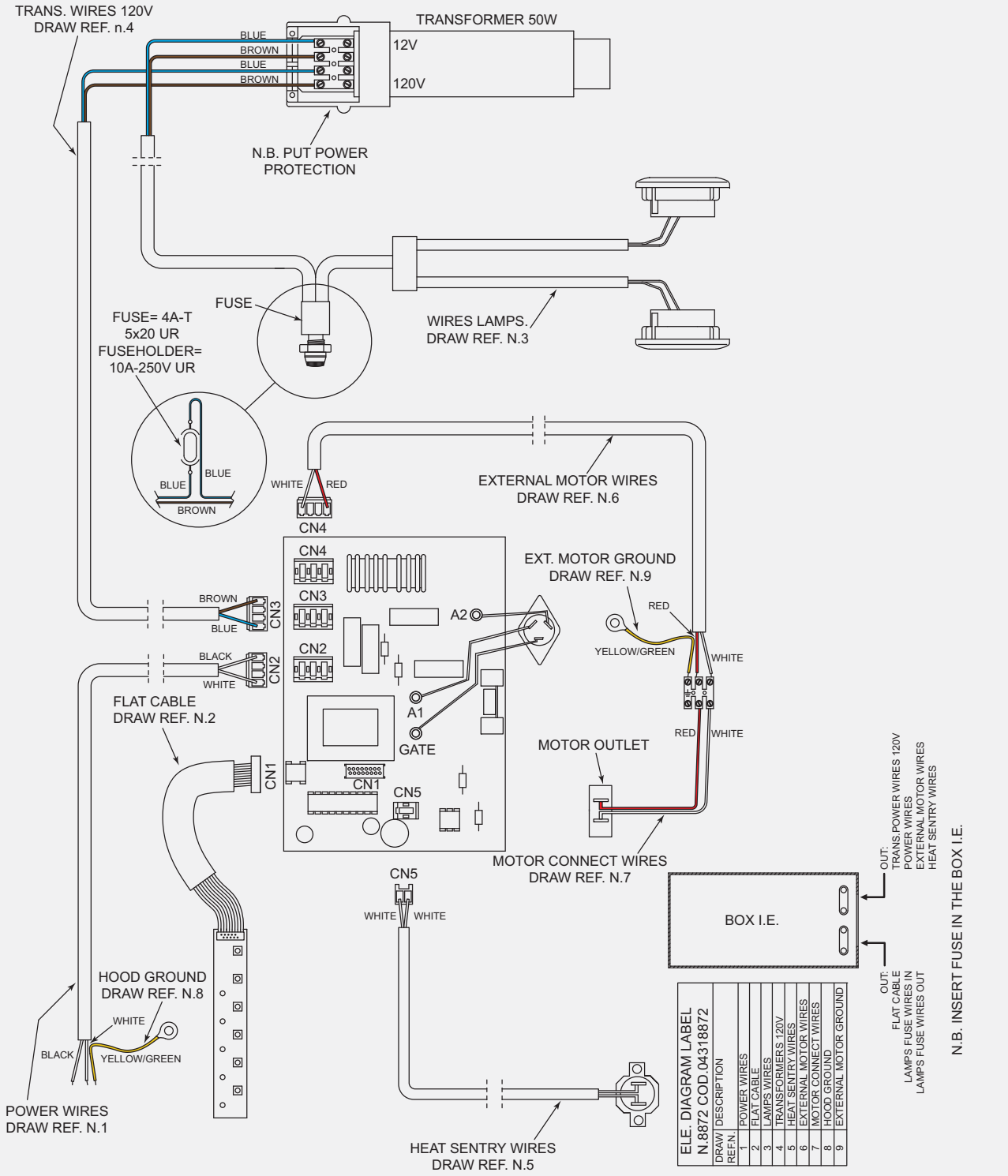

ELE. DIAGRAM LABEL N.8872 COD.04318872

DRAW REF.N	DESCRIPTION
1	POWER WIRES
2	FLAT CABLE
3	LAMPS WIRES
4	TRANSFORMERS 120V
5	HEAT SENTRY WIRES
6	EXTERNAL MOTOR WIRES
7	MOTOR CONNECT WIRES
8	HOOD GROUND
9	EXTERNAL MOTOR GROUND

Model CTWH36 Wiring Diagram

WIRING DIAGRAM

⚠ WARNING

- This wiring information is provided for use by qualified service personnel only.
- Disconnect appliance from electrical supply before beginning service.
- Be sure all grounding devices are connected when service is complete.
- Failure to observe the above warnings may result in severe electrical shock.

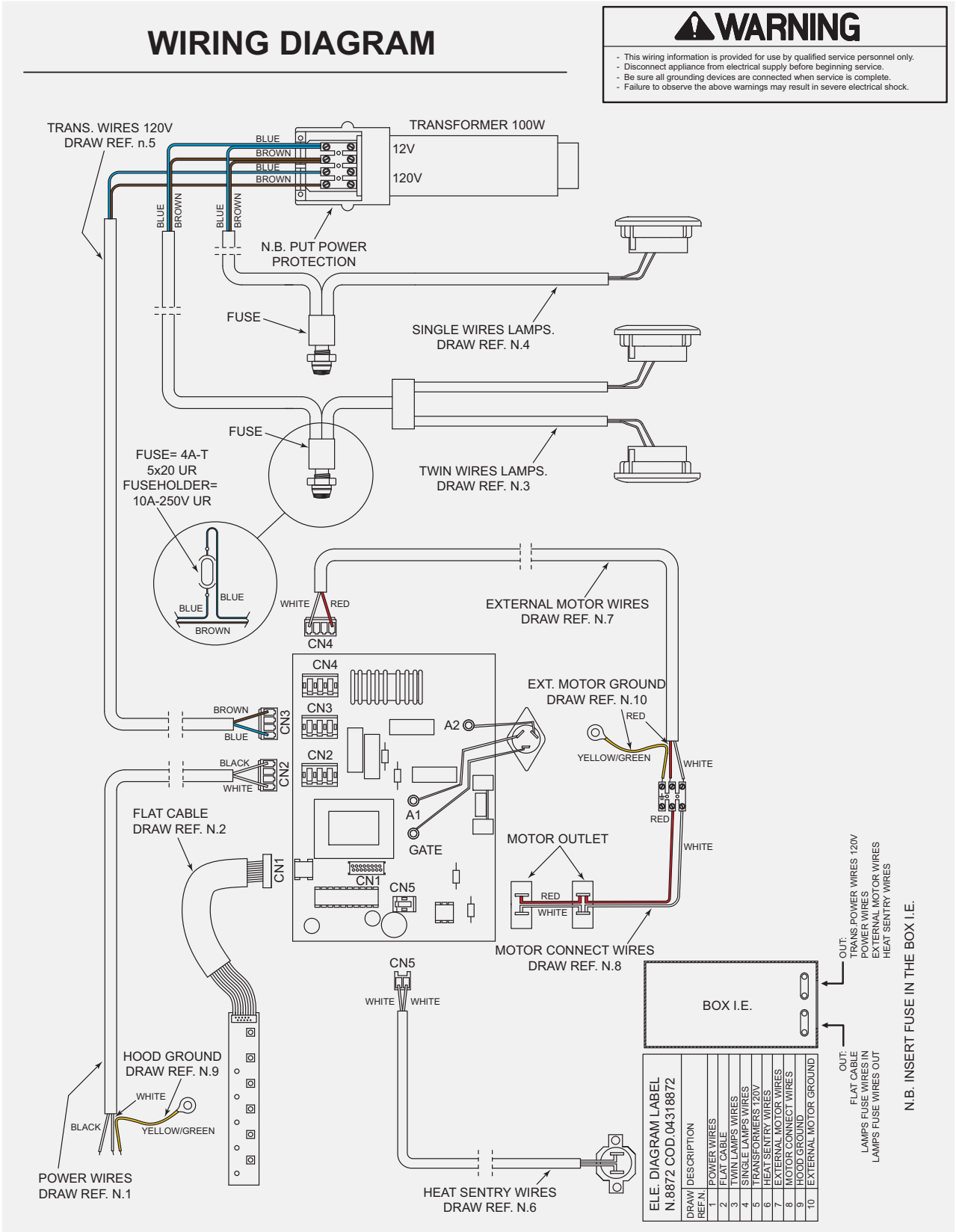

MODEL CT HOODS POWER SUPPLY WIRING

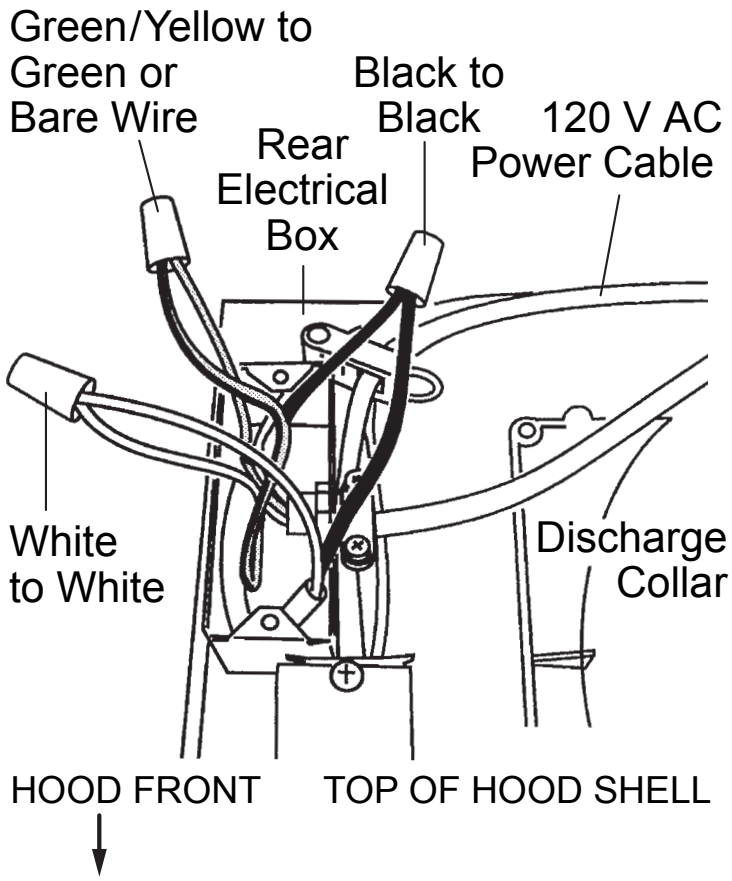

MODEL IH4227 WIRING DIAGRAM

WIRING DIAGRAM

⚠ WARNING

- This wiring information is provided for use by qualified service personnel only.
- Disconnect appliance from electrical supply before beginning service.
- Be sure all grounding devices are connected when service is complete.
- Failure to observe the above warnings may result in severe electrical shock.

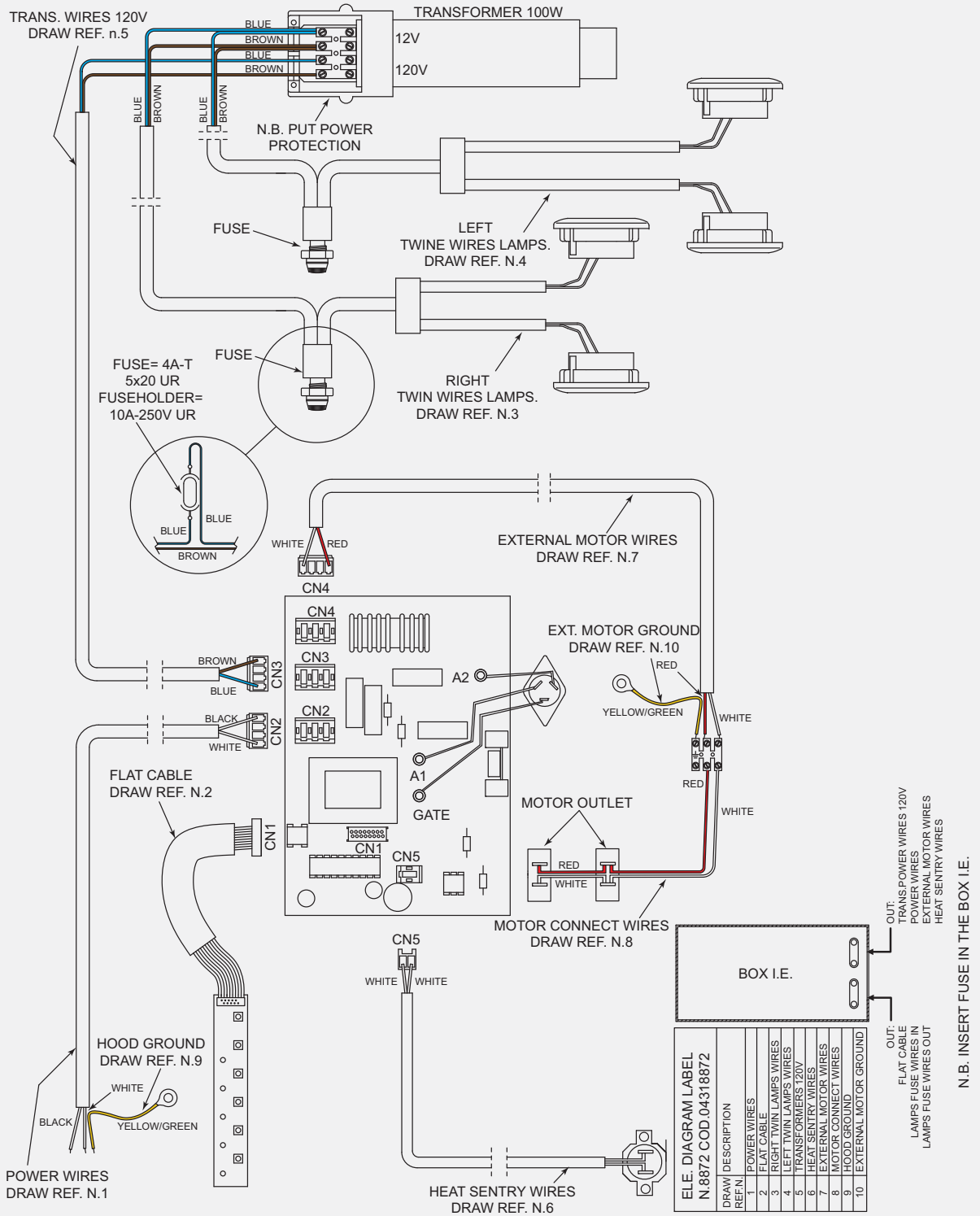

Model CTE Low Profile Hood Wiring Diagram

WIRING DIAGRAM

⚠ WARNING

- This wiring information is provided for use by qualified service personnel only.
- Disconnect appliance from electrical supply before beginning service.
- Be sure all grounding devices are connected when service is complete.
- Failure to observe the above warnings may result in severe electrical shock.

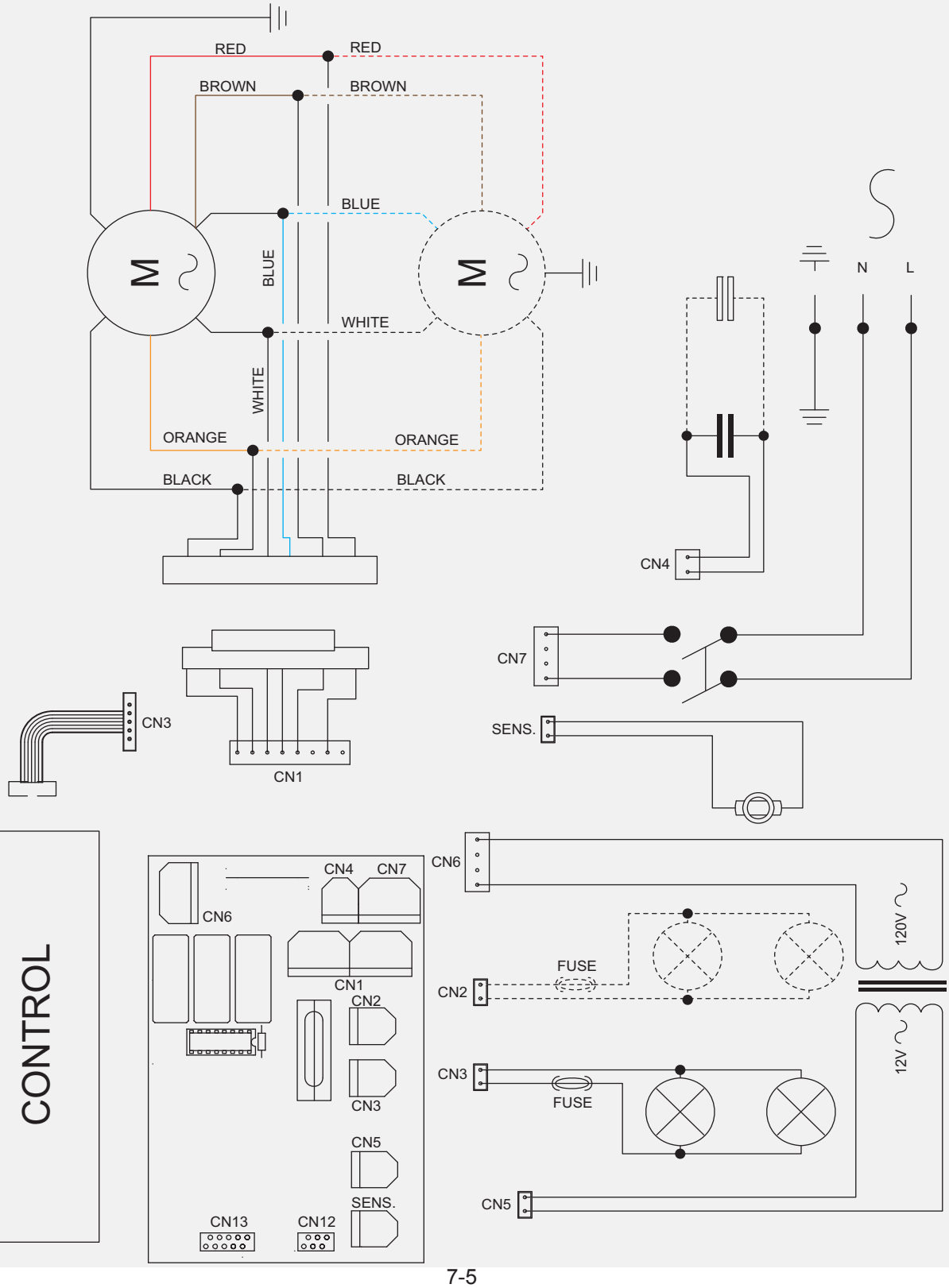

Model DD30 & DD36 Schematic

DOWNDRAFT WIRING DIAGRAM

⚠ WARNING

- This wiring information is provided for use by qualified service personnel only.
- Disconnect appliance from electrical supply before beginning service.
- Be sure all grounding devices are connected when service is complete.
- Failure to observe the above warnings may result in severe electrical shock.

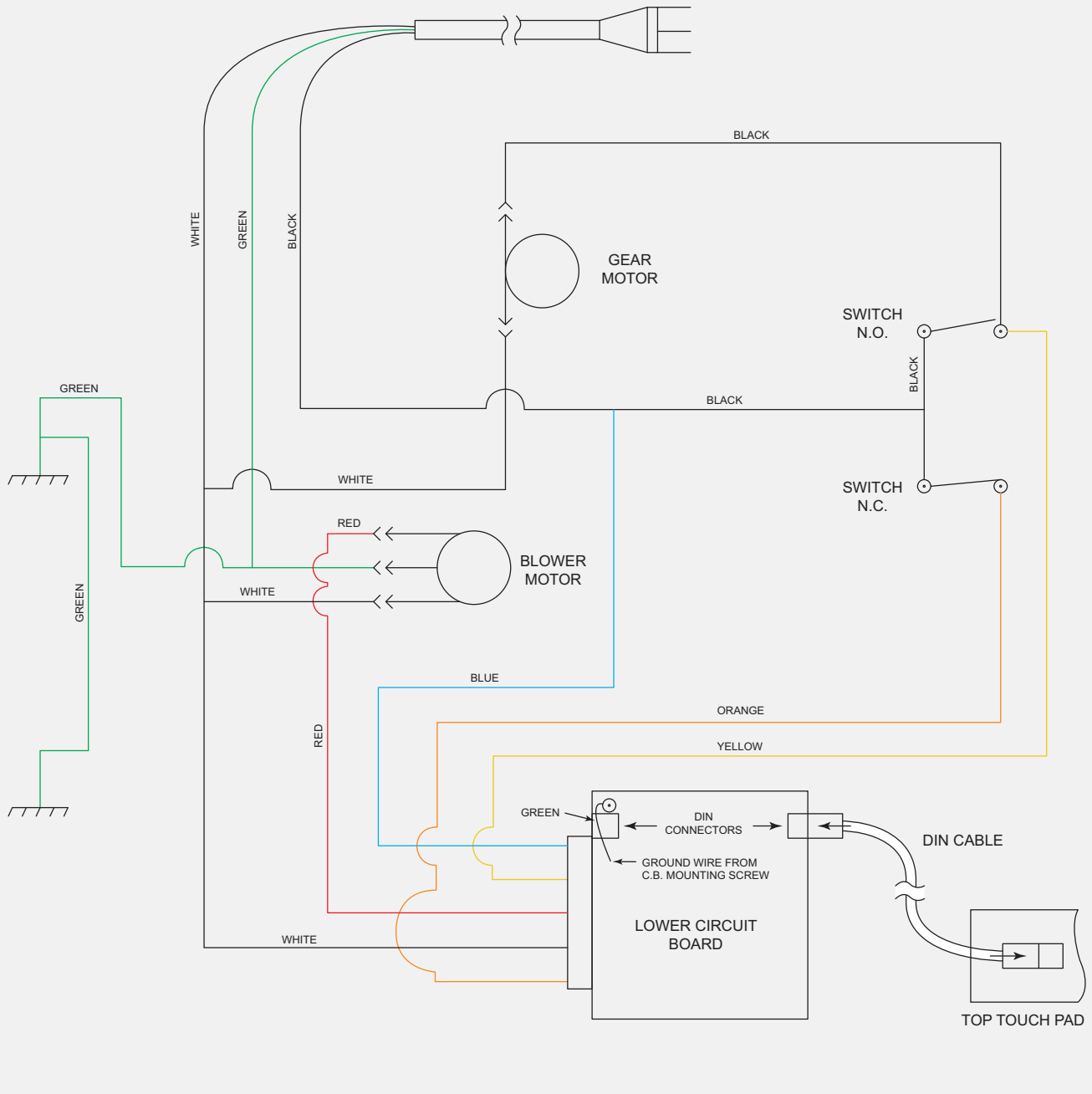

Model DD30 & DD36 Wiring Diagram

DOWNDRAFT WIRING DIAGRAM

⚠ WARNING

- This wiring information is provided for use by qualified service personnel only.
- Disconnect appliance from electrical supply before beginning service.
- Be sure all grounding devices are connected when service is complete.
- Failure to observe the above warnings may result in severe electrical shock.

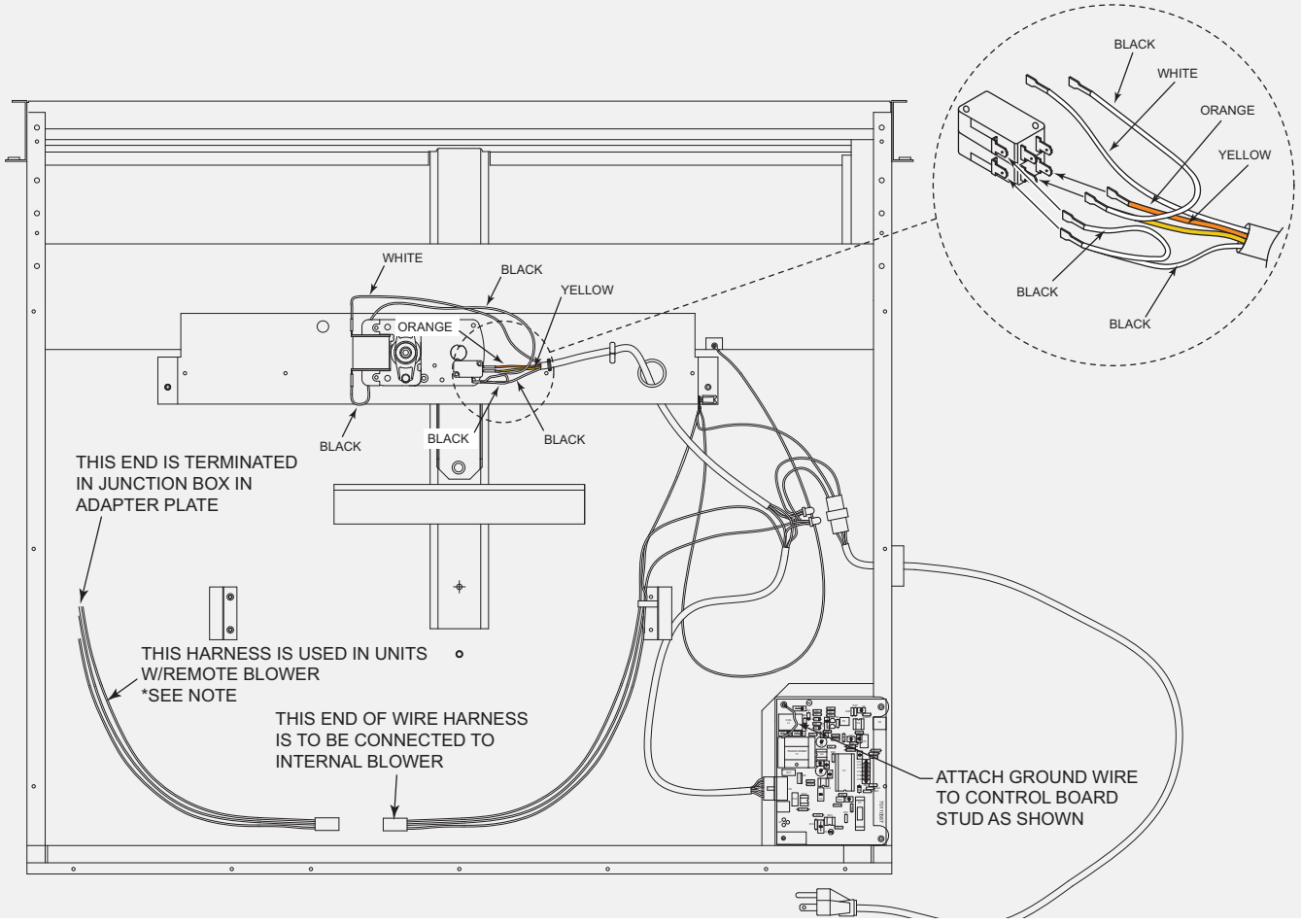

MODEL DD30 & DD36 CONTROL SCHEMATIC

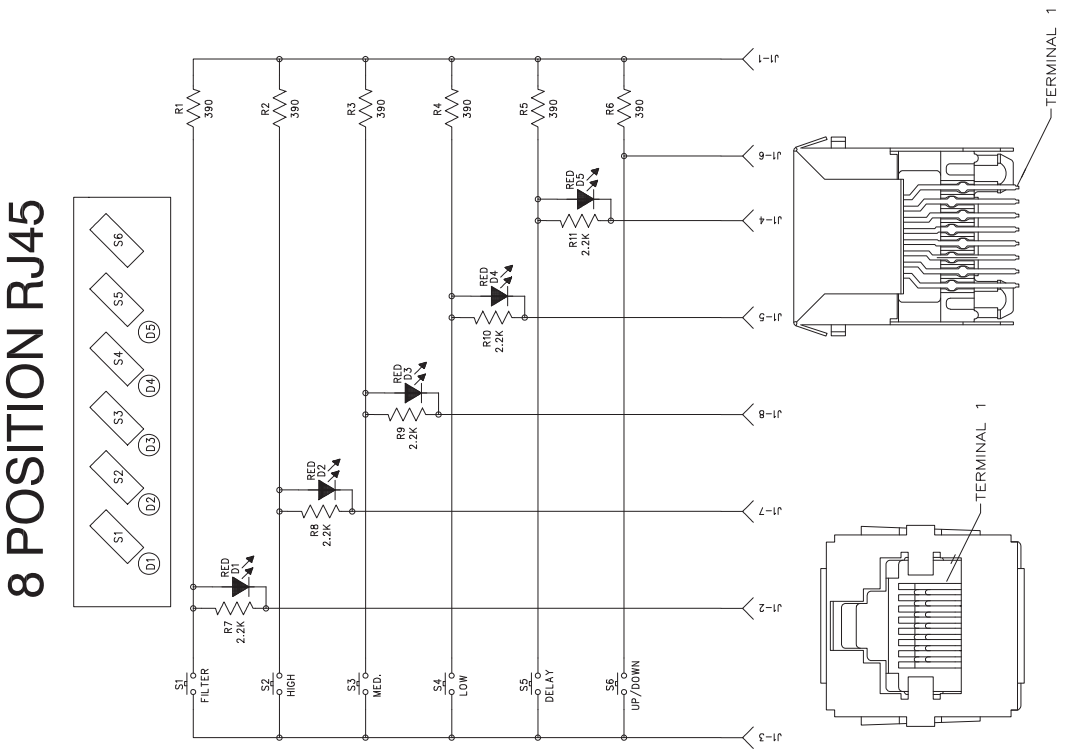

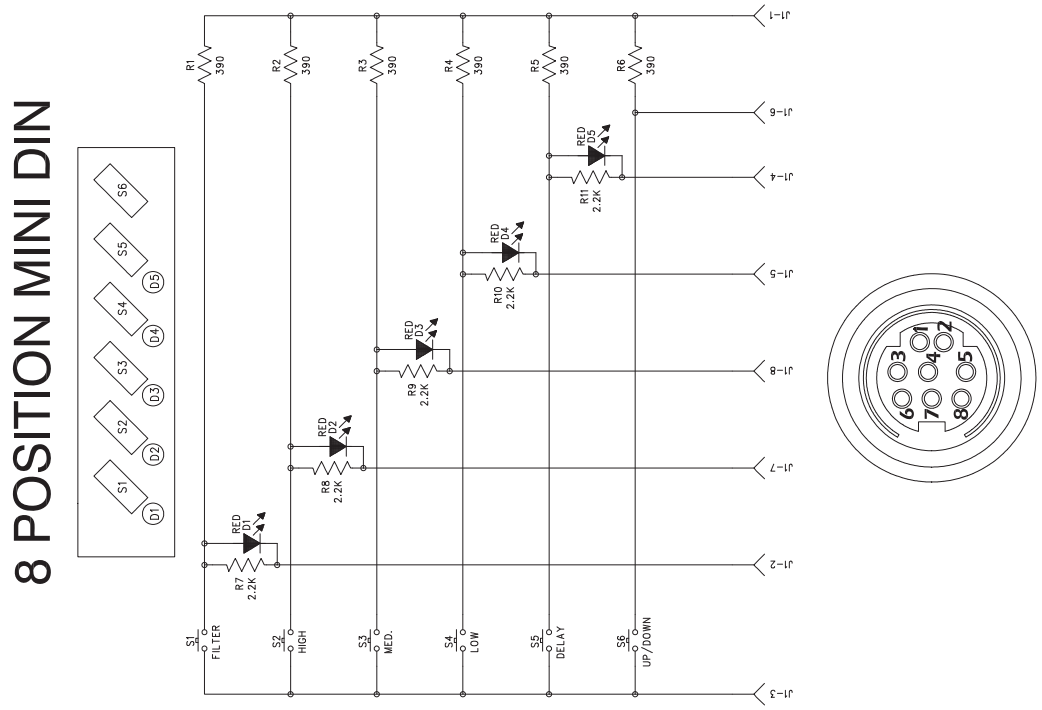

Model DD Power Supply Wiring

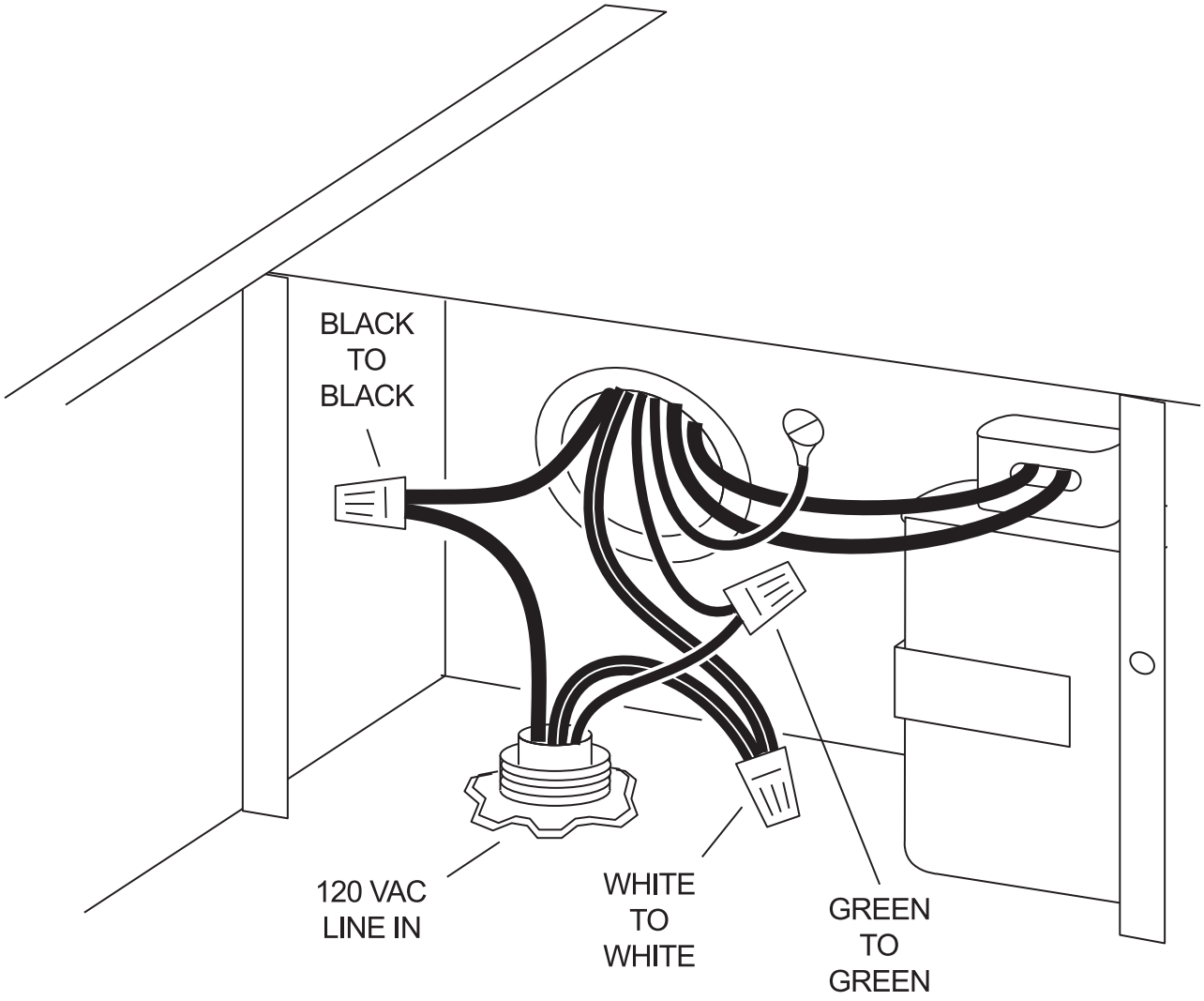

Model ICBDD30, ICBDD36 & ICBDD45 Schematic

WIRING DIAGRAM

⚠ WARNING

- This wiring information is provided for use by qualified service personnel only.
- Disconnect appliance from electrical supply before beginning service.
- Be sure all grounding devices are connected when service is complete.
- Failure to observe the above warnings may result in severe electrical shock.

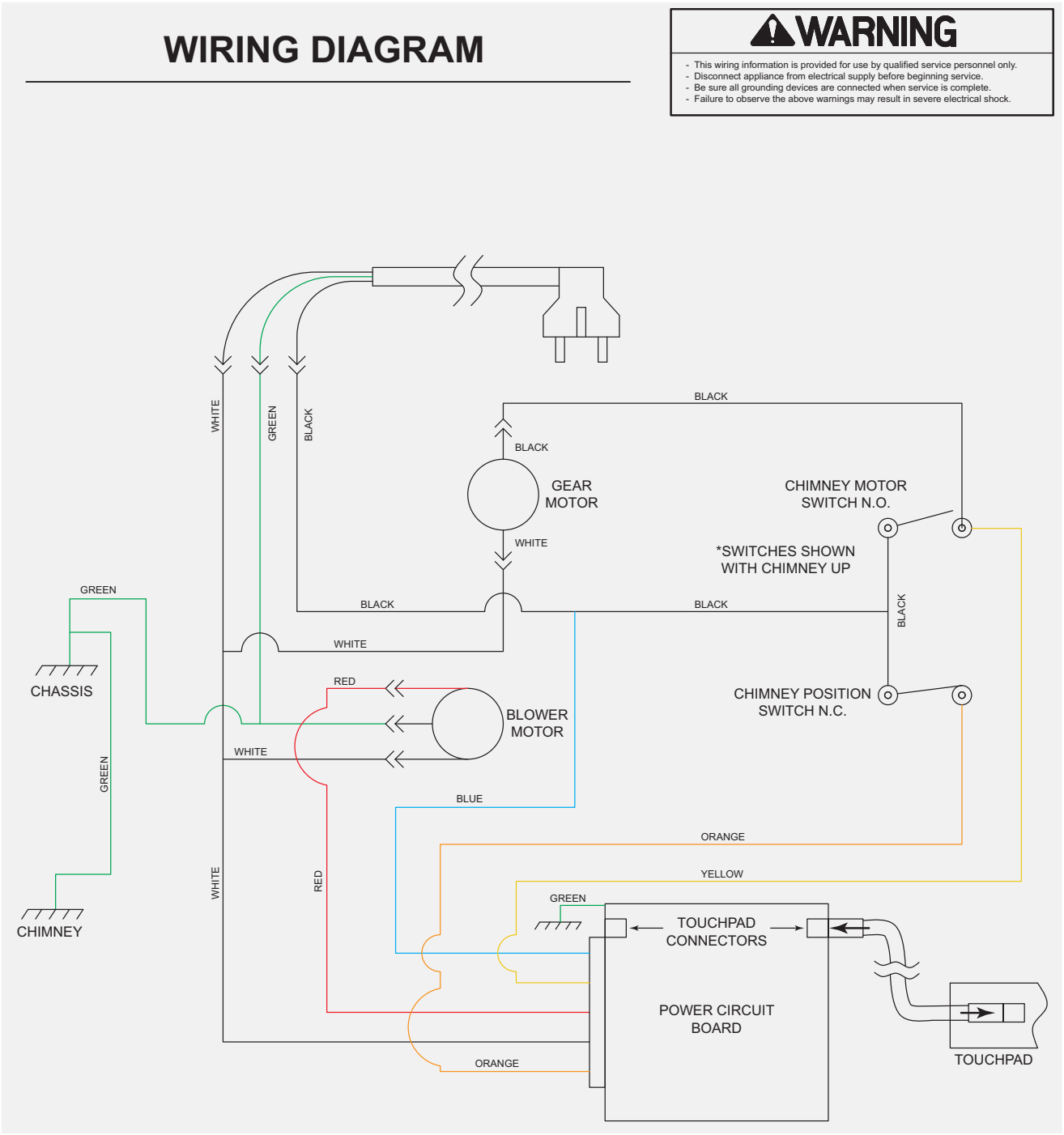

Model ICBDD30, ICBDD36 & ICBDD45 Wiring Diagram

DOWNDRAFT WIRING DIAGRAM

⚠ WARNING

- This wiring information is provided for use by qualified service personnel only.
- Disconnect appliance from electrical supply before beginning service.
- Be sure all grounding devices are connected when service is complete.
- Failure to observe the above warnings may result in severe electrical shock.

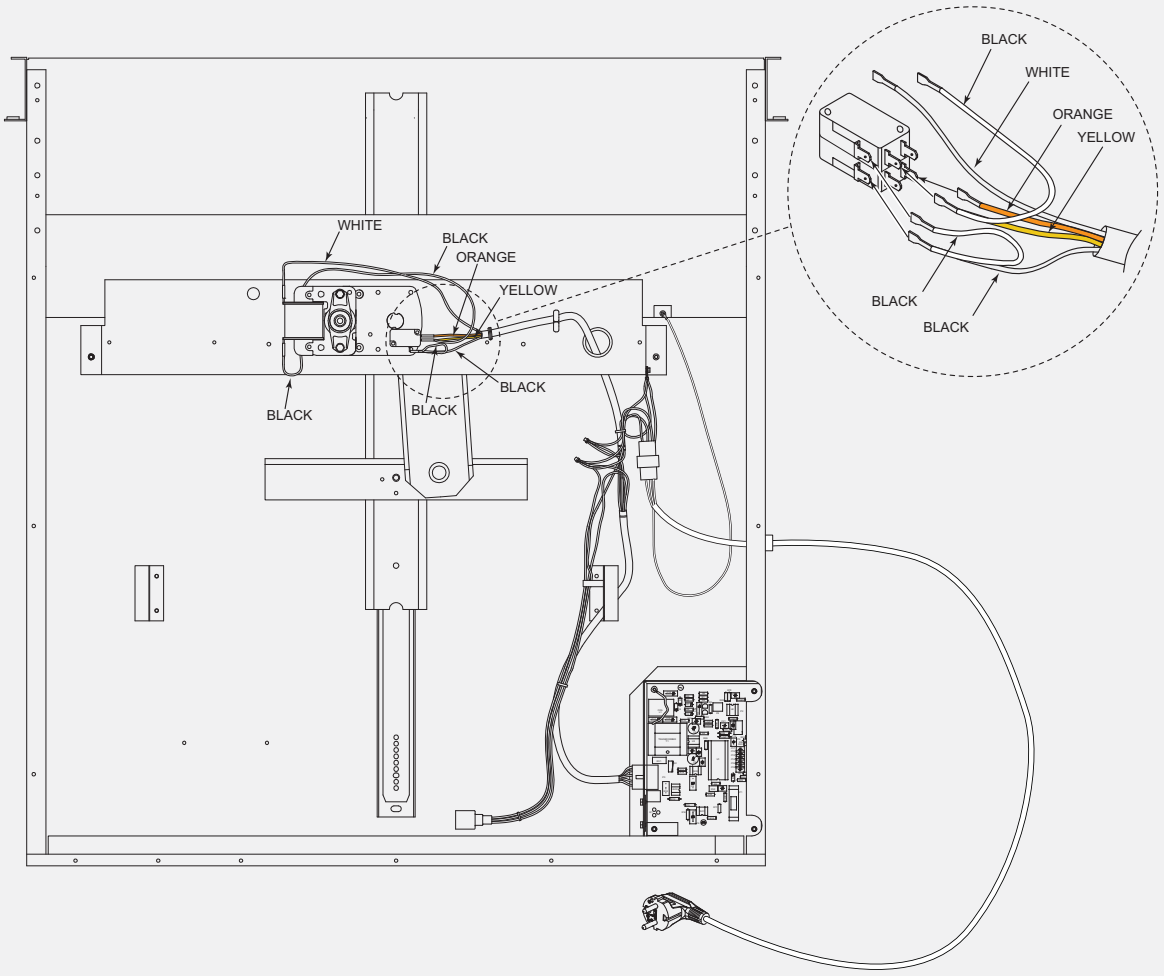

Blower Wiring Diagram & Schematic (450/600/900INT)

WIRING DIAGRAM AND SCHEMATIC

⚠ WARNING

- This wiring information is provided for use by qualified service personnel only.
- Disconnect appliance from electrical supply before beginning service.
- Be sure all grounding devices are connected when service is complete.
- Failure to observe the above warnings may result in severe electrical shock.

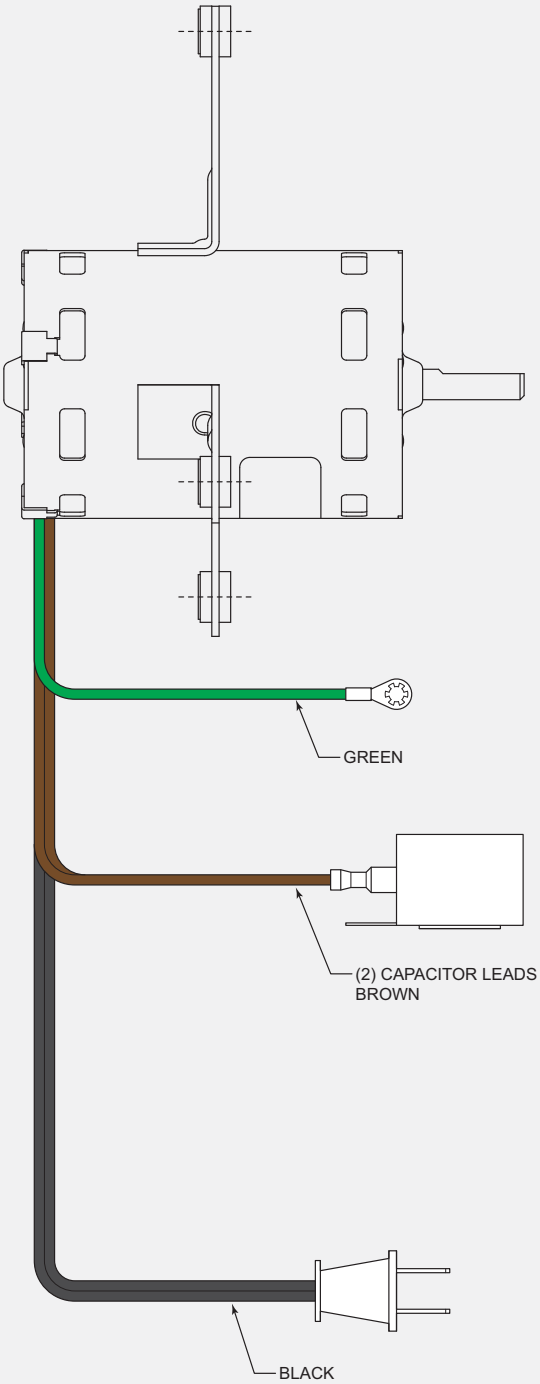

SCHEMATIC

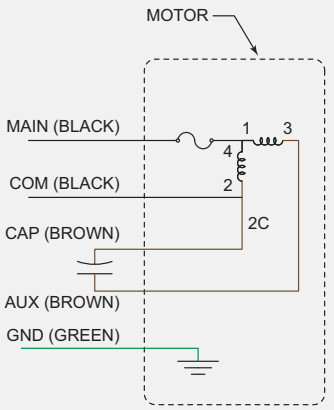

BLOWER SCHEMATIC (600/900EXT)

WIRING SCHEMATIC

⚠WARNING

- This wiring information is provided for use by qualified service personnel only.
- Disconnect appliance from electrical supply before beginning service.
- Be sure all grounding devices are connected when service is complete.
- Failure to observe the above warnings may result in severe electrical shock.

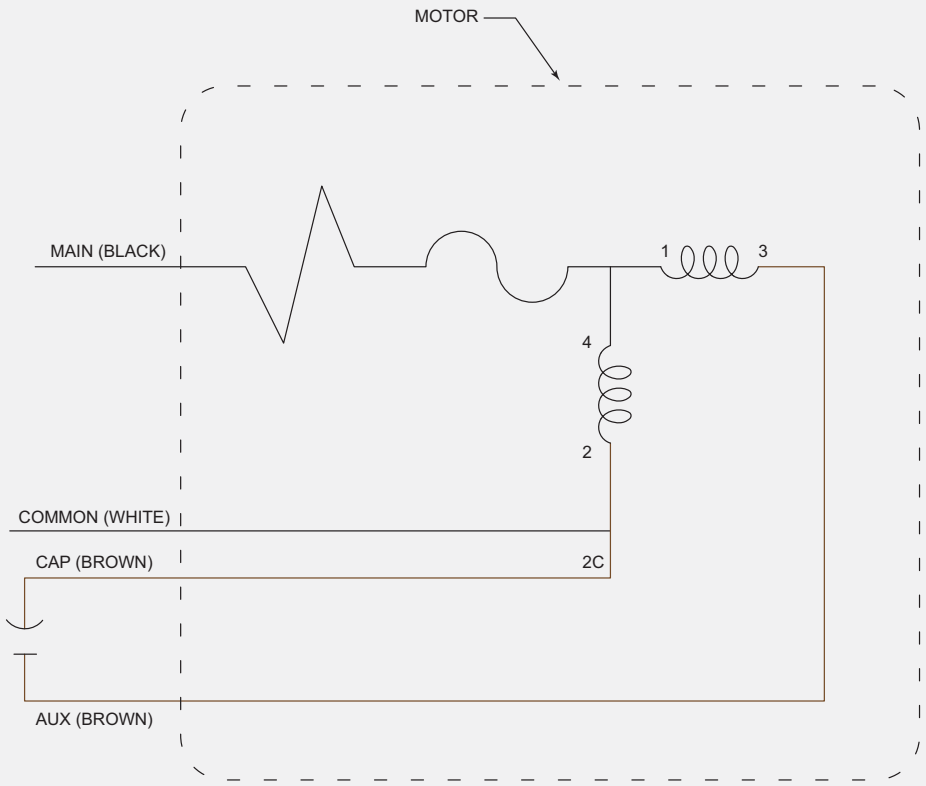

Blower Schematic (1200EXT)

WIRING DIAGRAM

⚠ WARNING

- This wiring information is provided for use by qualified service personnel only.
- Disconnect appliance from electrical supply before beginning service.
- Be sure all grounding devices are connected when service is complete.
- Failure to observe the above warnings may result in severe electrical shock.

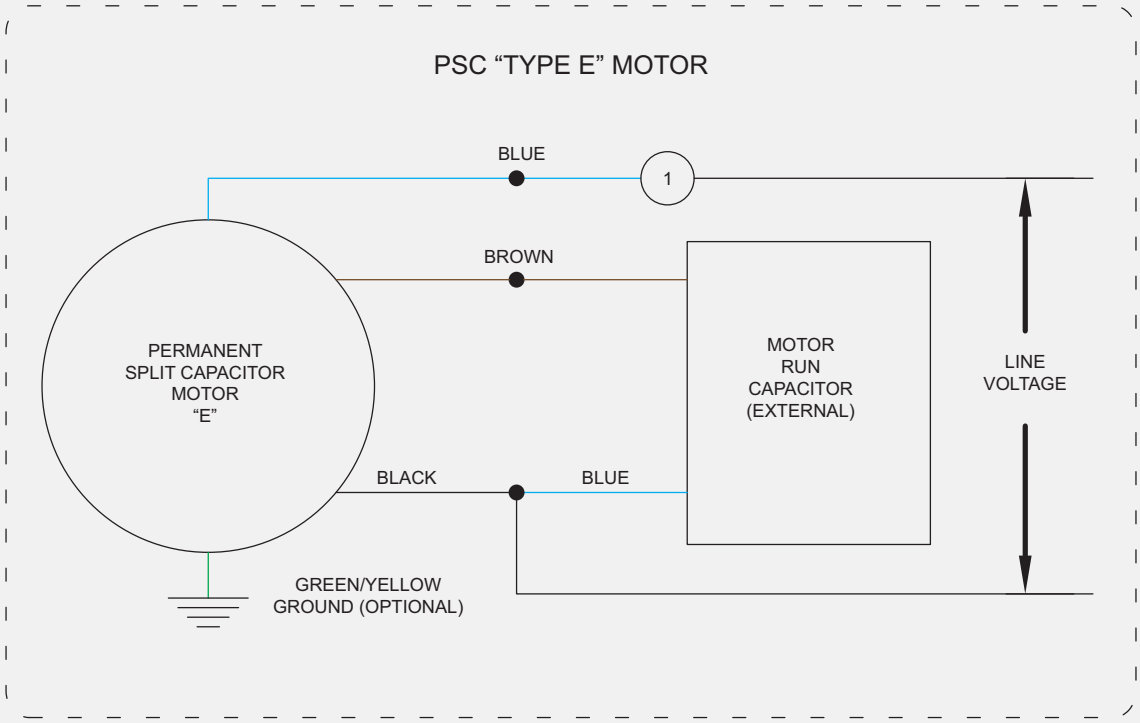

BLOWER SCHEMATIC (1500EXT)

WIRING DIAGRAM

⚠ WARNING

- This wiring information is provided for use by qualified service personnel only.
- Disconnect appliance from electrical supply before beginning service.
- Be sure all grounding devices are connected when service is complete.
- Failure to observe the above warnings may result in severe electrical shock.

