315W
Service Manual

General Information 2
Installation Information 6
Controls & Operation 9
Sealed System 13
Component Access & Removal 18
Troubleshooting Guide 27
Technical Data 31
Wiring Diagrams 32

INTRODUCTION

This Technical Service and Parts Manual is a compilation of the most recent service information provided by the Scotsman Company, and has been reprinted by Sub-Zero Freezer, Inc., with the permission of the Scotsman Company. This information will enable the service technician to diagnose malfunctions, perform necessary repairs and return a model 315W unit to proper operational status.

The service technician should read the complete instructions contained in this manual before initiating any repairs on a model 315W.

IMPORTANT SAFETY INFORMATION

Below are Product Safety Labels used in this manual. The "Signal Words" used are **WARNING** or **CAUTION**.

When reviewing this manual, please note these different Product Safety Labels placed at the beginning of certain sections of this manual. You must follow the instructions given in the boxes of the Product Safety Labels in order to avoid personal injury and/or product damage.

The sample Product Safety Labels below illustrate the precautions that should be taken when the signal word is observed.

⚠ WARNING

INDICATES THAT HAZARDOUS OR UNSAFE PRACTICES COULD RESULT IN SEVERE PERSONAL INJURY OR DEATH.

⚠ CAUTION

Indicates that hazardous or unsafe practices could result in minor personal injury, and/or product damage, and/or property damage.

In addition, please pay attention to the signal word ***"NOTE"***, which highlights information that is especially important for the topic being covered.

TECHNICAL ASSISTANCE

If you should have any questions regarding the 315W or this manual, please contact:

Sub-Zero, Inc.
ATTN: Service Department
P.O. Box 44988
Madison, WI 53744 - 4988

Customer Assistance
Phone #: (800) 222 - 7820
Facsimile #: (608) 441 - 5887

Technical Assistance
(For Technicians in Customer's Homes Only)
Phone #: (800) 919 - 8324

Warranty Claims
Phone #: (800) 332 - 9513
Facsimile #: (608) 441 - 5886

Service Department e-Mail Address:
customerservice@subzero.com

Office Hours:
7:00 AM to 6:00 PM Central Time
Monday through Friday

This manual was designed to be used by Authorized Service Personnel only. Sub-Zero, Inc. assumes no responsibility for any repairs made on Sub-Zero refrigeration units by anyone other than Authorized Service Technicians.

Information and images contained in this manual are the copyright property of Sub-Zero, Inc. Neither this manual nor any information or images contained herein may be copied or used in whole or in part without the express written consent of Sub-Zero, Inc.
© Sub-Zero, Inc, all rights reserved.

WARRANTY INFORMATION

This page summarizes the *2, 5 & 12 Year Warranty* provided with every 315W unit, as well as two special warranties:

- *Non-Residential Warranty* - Applies to units installed in non-residential applications.
- *Display/Model Home Warranty* - Applies to distributor or dealer display units, and units in model homes, sold three years after date of manufacture.

Following the warranty summaries are details and notes about the warranties.

TWO, FIVE & TWELVE YEAR Warranty

- 2 year TOTAL PRODUCT, *parts and labor.

  NOTE: *Stainless Steel (Classic, carBon & Platinum) doors, panels & product frames are covered by a 60 day parts & labor warranty for cosmetic defects.*
- 5 Year SEALED SYSTEM, **parts and labor.
- 6th - 12th year LIMITED SEALED SYSTEM, **parts only.

ONE & FIVE YEAR Non-Residential Warranty (Example: Office, Yacht, etc.)

- 1 Year TOTAL PRODUCT, *parts and labor.

  NOTE: *Stainless Steel (Classic, carBon & Platinum) doors, panels & product frames are covered by a 60 day parts & labor warranty for cosmetic defects.*
- 5 Year SEALED SYSTEM, **parts and labor.

ONE & FIVE YEAR Display/Model Home Warranty (Display units sold three years after date of manufacture)

- 1 Year TOTAL PRODUCT, *parts and labor.

  NOTE: *Stainless Steel (Classic, carBon & Platinum) doors, panels & product frames are covered by a 60 day parts & labor warranty for cosmetic defects.*
- 5 Year SEALED SYSTEM, **parts and labor.

Warranty Details

* *Includes, but is not limited to the following:*

Light Switch, Fan Motor & Blade, Drain Pan, Drain Tube, Wiring, Light socket & bulbs, Door hinges, Compressor Electricals, etc. . .

* *Stainless Steel (Classic, Platinum & Carbon) doors, panels and product frames are covered by a limited 60 day parts and labor warranty for cosmetic defects.*

** *Includes the following:*

Compressors, Condenser, Evaporators, Filter-Driers, Heat-exchangers, All Tubing that Carries the Freon.

NOTE: *Condenser Fan Motors, Freon, Solder and compressor electricals are NOT considered sealed system parts.*

Warranty Notes

- *All warranties begin at unit's initial installation date.*
- *All Warranty and Service information collected by Sub-Zero is arranged and stored under the unit serial number, and the customer's last name.*
  Sub-Zero requests that you have the model and serial number available whenever contacting the factory or parts distributor.
- *The serial number tag for model 315W is located on the compartment divider, directly behind the kickplate.* (See Figures 1-1 and 1-2)

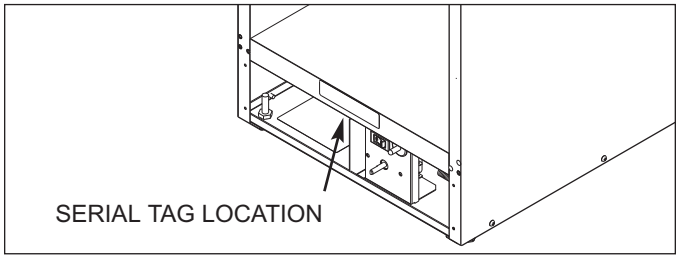

Figure 1-1. Serial Tag Location

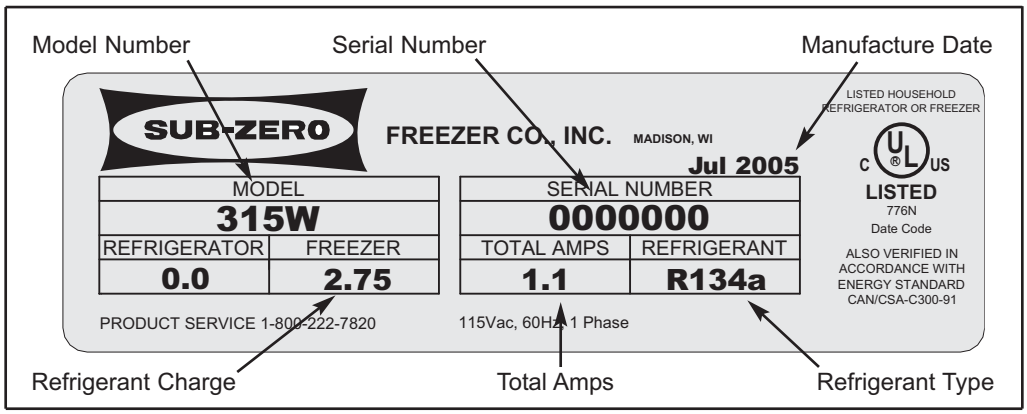

Figure 1-2. Serial Tag Layout

MODEL DESCRIPTION

This page briefly describes the model 315W.

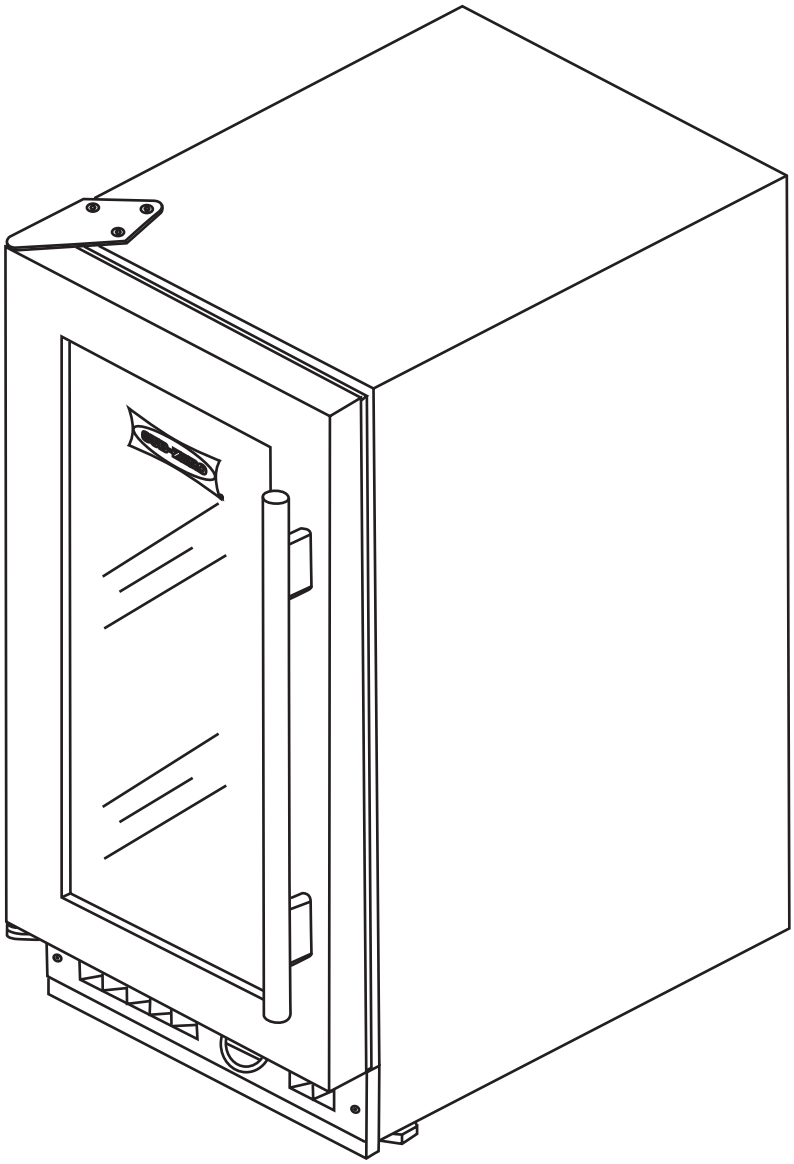

Model	Basic Dimensions*	Compressor	Condenser	Basic Electrical	Refrigerant Charge
315W	15” w x 33 3/8” h x 21” d	1/16 HP	Forced Draft	115 volts, 60 Hz, Single Phase	2.75 oz R-134a

Temperature Range, Recommended Wine Storage Temperatures and Recommended Wine Serving Temperatures:

The table below shows the Model 315W temperature range and the recommended temperatures for *"serving"* wines. Serving wines at the recommended temperatures will insure that white wines maintain their lively and interesting taste, and red wines will maintain their scent and flavor.

NOTE: *For "long term storage" of all wines, the ideal temperature is 55°F / 13°C.*

		Fahrenheit	*Celsius*
	Model 315W Maximum Temperature	65°	18°
Recommended Wine Serving Temperatures	*Bordeaux*	63°	17°
	Red Burgundy	61°	16°
	Beaujolais	54°	12°
	Sherry	52°	11°
	Rosés	48°	9°
	Dry White Wines	48°	9°
	Champagne	46°	8°
	Sweet White Wines	43°	6°
	Sparkling Wines	41°	5°
	Model 315W Minimum Temperature	38°	3°

PRE-INSTALLATION CONSIDERATIONS

Air Flow

The model 315W uses a fan to take room air in through the front left side of the kickplate/grille (See Figure 2-1).

⚠ CAUTION

Airflow through the kickplate/grille must never be obstructed. Doing so will cause a decrease in performance and possible damage to the 315W unit.

The minimum ambient air temperature the 315W will operate in is 50°F/ 10°C, and the maximum air temperature is 100°F/ 38°C.

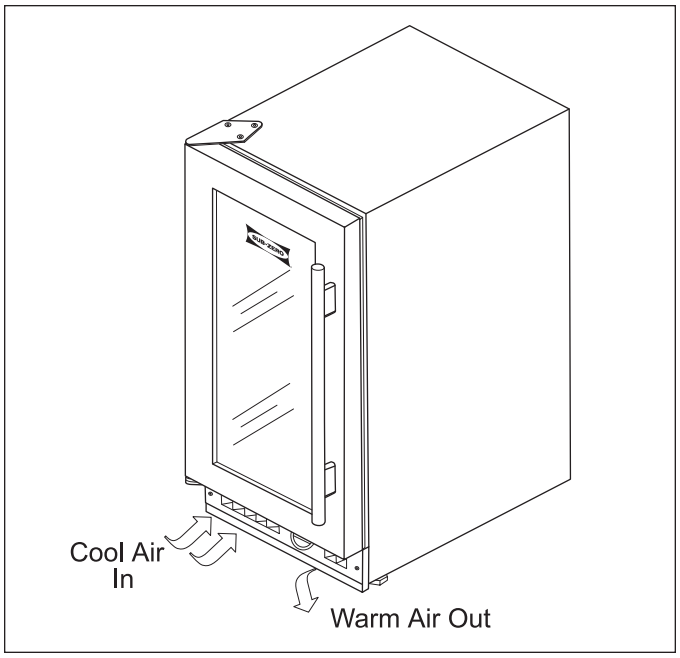

Figure 2-1. Air Flow

Electricity

The model 315W is supplied with a three prong power cord to be plugged into a grounded wall outlet (See Figure 2-2). The outlet should be on a branch circuit of 115 VAC, 60 Hz, single phase 15 amp, delayed action fuse or circuit breaker. The 315W should be the only device using that circuit.

⚠ WARNING

- **PLUG UNIT INTO GROUNDED 3-PRONG OUTLET.**
- **DO NOT REMOVE GROUND PRONG FROM POWER CORD.**
- **DO NOT USE A 2-PRONG ADAPTER.**
- **DO NOT USE AN EXTENSION CORD.**

FAILURE TO FOLLOW THESE INSTRUCTIONS CAN RESULT IN FIRE, ELECTRICAL SHOCK, OR DEATH!

Note: *Follow all local, state and national codes.*

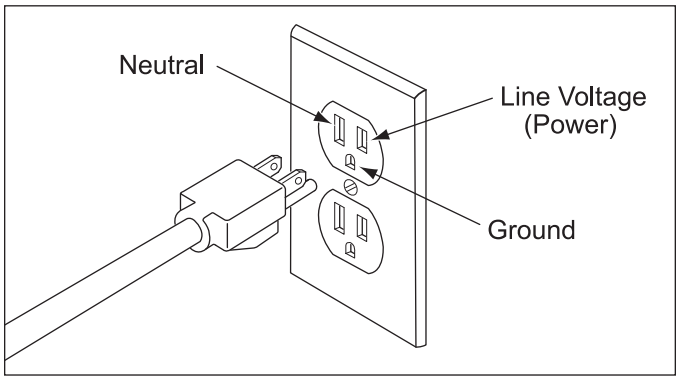

Figure 2-2. Power Cord and Wall Outlet

Possible Need for Unit Removal

In most cases it will be necessary to pull the 315W unit from its installation for service. For this reason, the area under the 315W should be at the same height as the surrounding finished floor and any decorative molding must be removable, as well as the unit ti counter top bracket (if used).

Moving the Unit

When the unit is moved into the house, or needs to be removed from the house for service purposes, it is recommended to use a hand truck or dolly. Be sure to position dolly on the side of unit and securely tape the door shut so it will not open while transporting the unit.

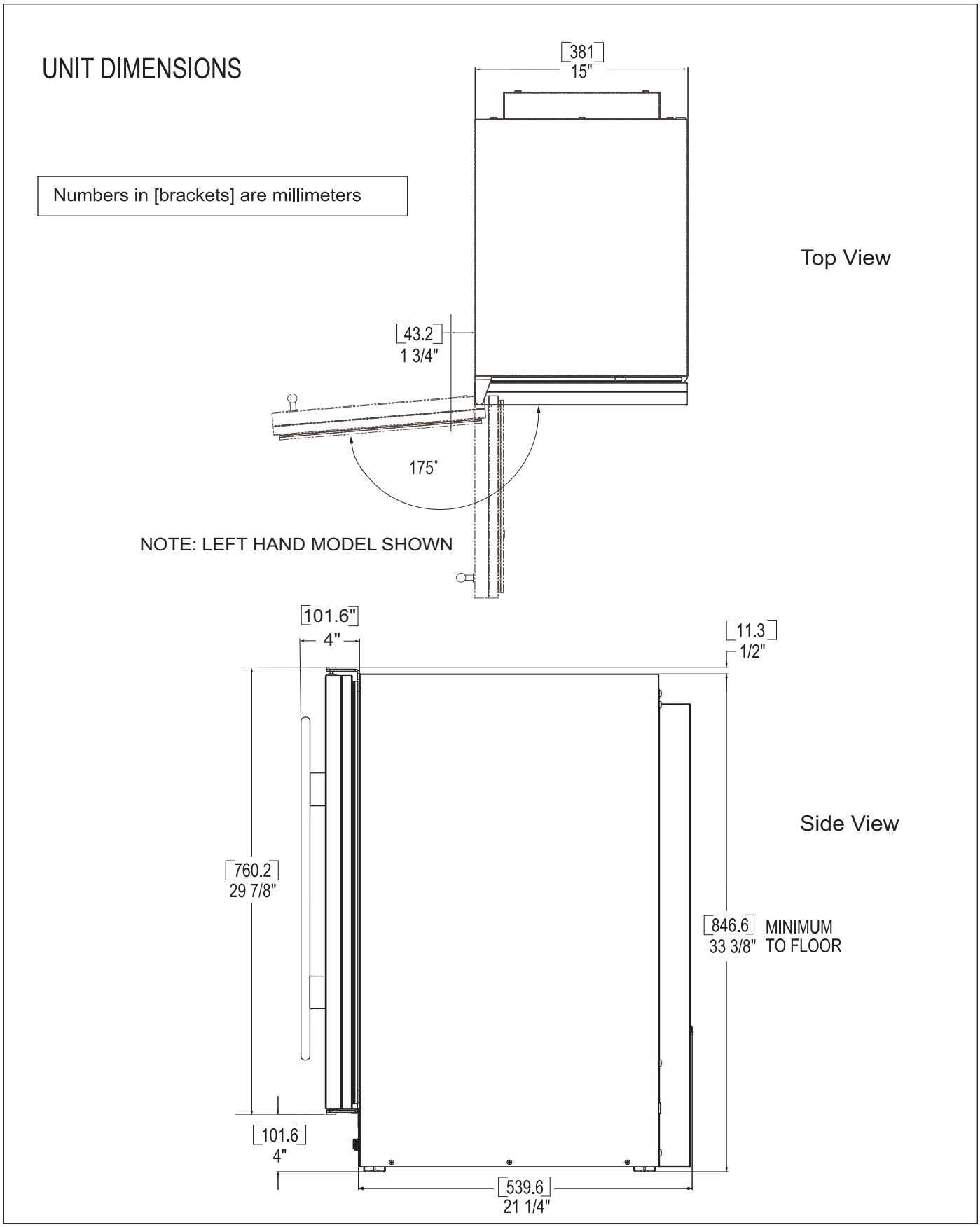

Figure 2-3. Unit Dimensions

INSTALLATION

Leveling

Note: This model must be leveled prior to installation.

There are four leveler legs on a model 315W, one at each corner. To level the unit, turn the leveler legs counterclockwise to raise the unit or clockwise to lower the unit. (See Figure 2-5)

If the unit is to be built in, with the electrical outlet behind the installed location, plug unit in and slide back into position. Check for stability and adjust legs as needed.

If unit is free standing, move it into place and check for stability. Adjust legs as needed. Plug unit into an electrical outlet.

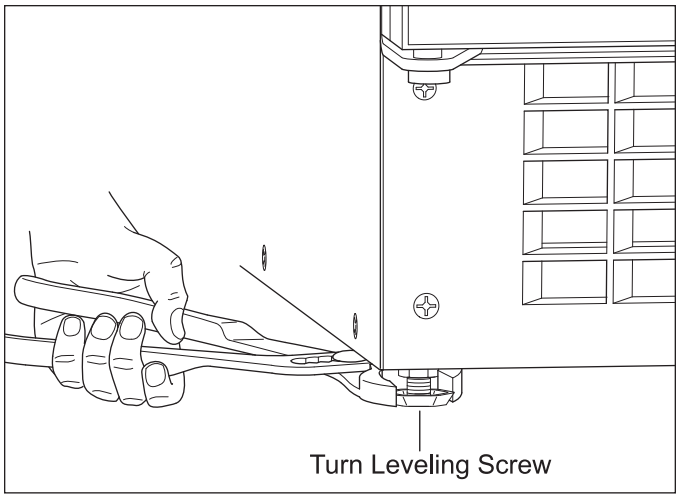

Figure 2-5. Unit Leveling

Initial Start-up

When the installation is complete, be sure to remove all tape and packing materials before initial start-up.

Locate the temperature control knob on the bottom front of unit. Rotate knob clockwise to an operating position. (See Figure 2-6)

You should immediately hear a humming noise and feel air blowing in and out of the vents near the knob. (See Figure 2-7) After 10 minutes open the door and feel the back panel inside the cabinet. It should feel cold to the touch.

To switch refrigeration off, rotate the temperature control knob fully counterclockwise. The light will still be operational.

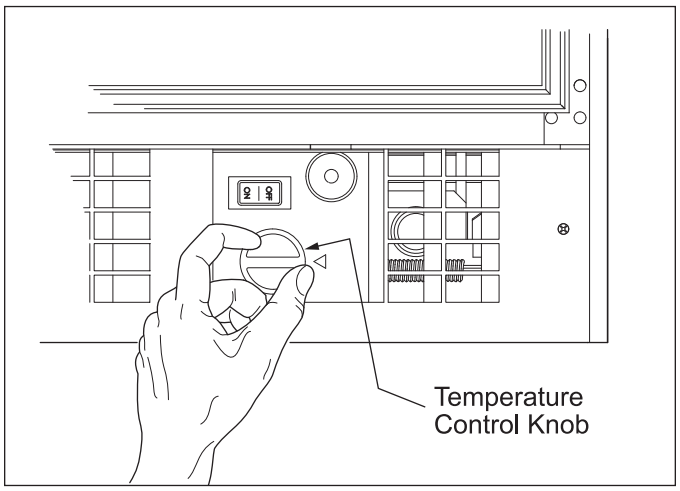

Figure 2-6. Temperature Control

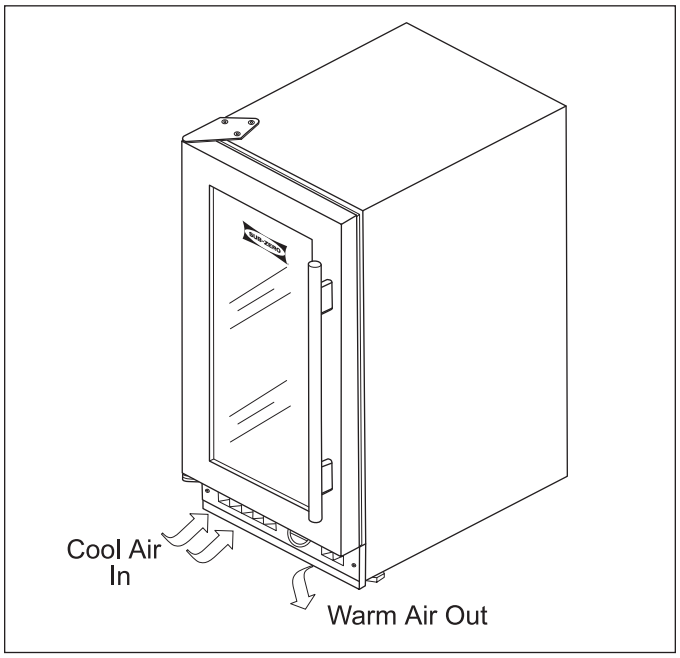

Figure 2-7. Air Flow

Basic Operation

Loading

The six racks are designed to hold four bottles each with the necks pointing toward the center. (See Figure 3-1) Two additional bottles may be placed sideways on the bottom of the compartment for a total of twenty-four (24). If large bottles do not fit between the racks, remove an upper rack and place bottles on the rack below.

To remove a rack, remove the bottles on that rack, then pull rack forward until it stops. Lift front of rack up while pulling forward. After indentations on the wine rack clear the rollers on the cabinet slides, lower front of rack while continuing to pull forward and lifting rear of rack out of unit.

NOTE: *Loaded racks can be heavy. If several loaded racks are pulled out at once, the unit could tip forward unexpectedly.*

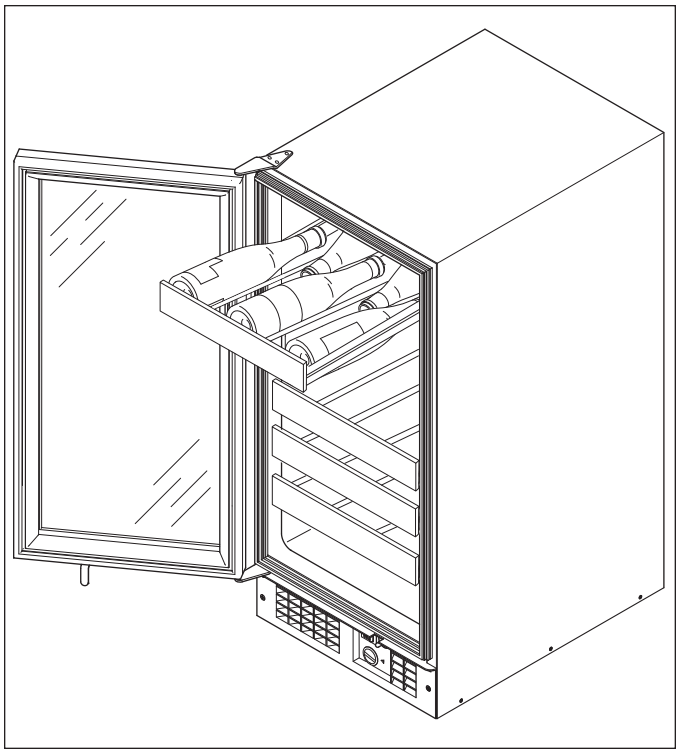

Figure 3-1. Loading the 315W

Temperature Control

Rotate the temperature adjustment knob clockwise until the desired temperature is achieved (See Figure 3-2).

Interior cabinet temperatures will be higher at the top and front and cooler at the bottom. Place a thermometer in the compartment to check the temperatures.

Wine rack positions correspond to these temperature ranges. The upper two racks will be the warmest, that is where red wines would be placed. The middle two racks are where the white wines would go, and the bottom area is where sparkling wines would be kept.

The recommended temperatures for *"serving"* wines are:

- Red wines - around 60°F (16°C).
- Rosé wines - around 50°F (10°C).
- Sparkling wines - around 45°F (7°C).

NOTE: *Air temperature inside the compartment will fluctuate slightly as the cooling system cycles on and off. In very warm room ambient conditions the unit may run continuously.*

NOTE: *When initially loaded with room temperature product, the 315W may operate continuously for as much as 24 hours until the temperature inside the cabinet reaches the desired set-point.*

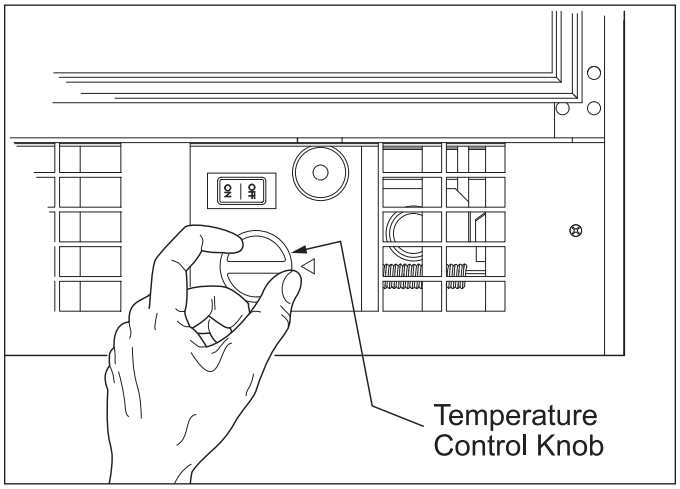

Figure 3-2. Adjusting Temperature

Switching Light On or Off

The display light automatically switches on when the door is opened. To have the light on when the door is closed, move light switch to ON position. (See Figure 3-3)

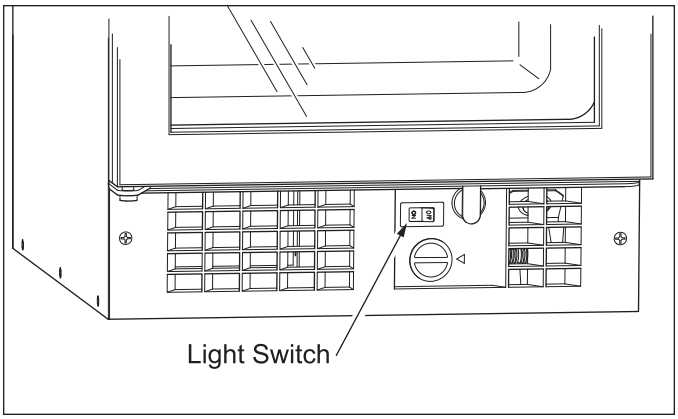

Figure 3-3. Light Switch

MAINTENANCE

Little maintenance is required other than keeping the unit clean. The evaporator at the back of the compartment is an off-cycle-defrost type. Any frost that develops during operation melts and drains away when the unit cycles off. Water from the evaporator drains into a pan at the bottom of the cabinet and evaporates into the room air.

Routine Maintenance

The following procedures can be followed to ensure proper operation of the 315W.

1. About once a year check the drain trough and hose by pouring about a half-cup of water into it to be sure it drains well. (See Figure 3-7)
2. The outside of the cabinet can be kept clean by wiping it with mild soap and water.
3. The inside liner can be washed using any non-petroleum based soap and water.
4. The glass door can be cleaned with any glass cleaner.
5. The door gasket can be removed for cleaning by pulling it out of its channel (See Figure 3-4).
6. The condenser should be vacuumed approximately every 3 to 6 months to remove any dust or lint that may have been drawn to it. To access the condenser, use a phillips screwdriver to remove the kickplate. Then, use an accessory probe on the vacuum cleaner hose to reach back into the left side of the compressor area to remove any lint from the front of the condenser fins. (See Figure 3-5 and Figure 3-6)

⚠ CAUTION

Take care to not damage the condenser fins. Doing so will reduce the efficiency of the appliance.

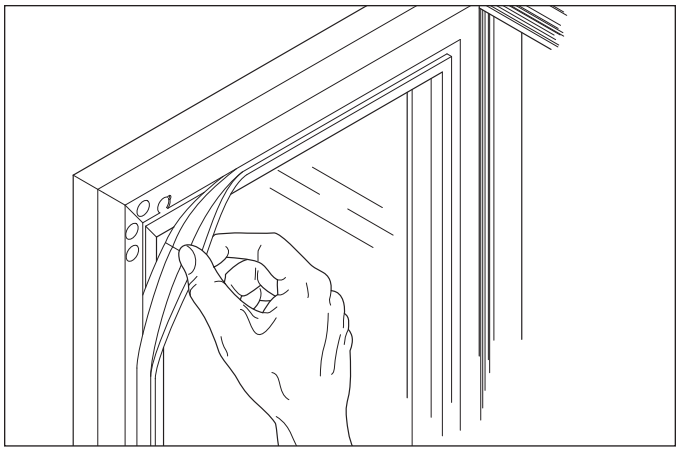

Figure 3-4. Door Gasket Removal

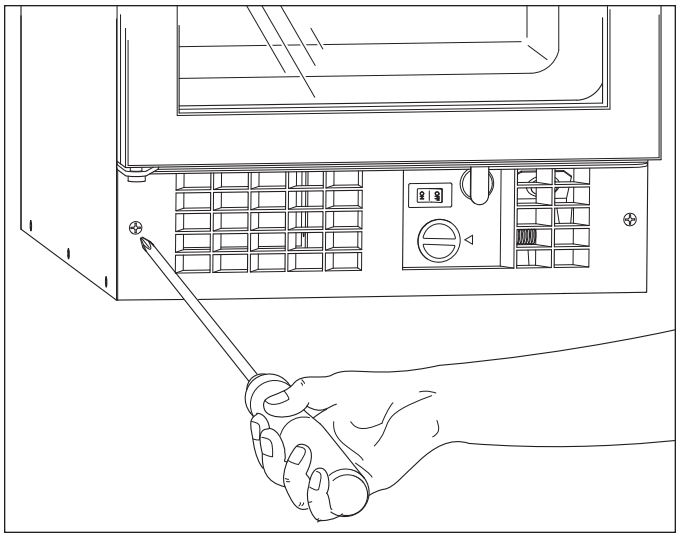

Figure 3-5. Remove Kickplate

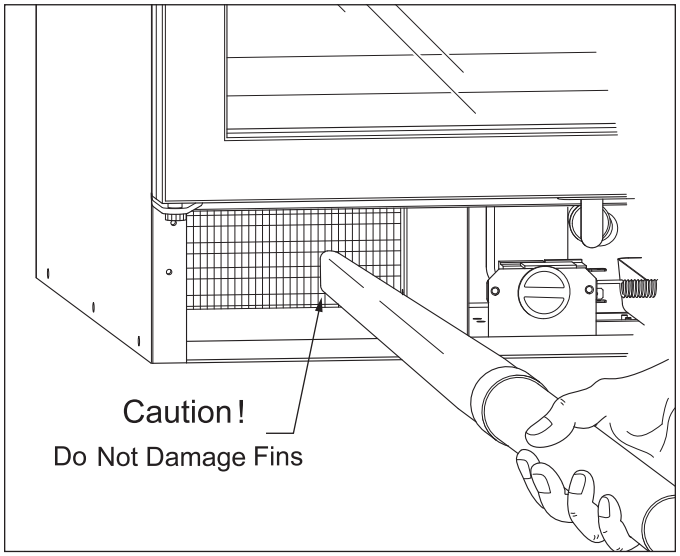

Figure 3-6. Vacuum Fins

Drain System Note

The 315W has an evaporator drain system below the evaporator. Moisture will form on evaporator panel at the back of the unit, then during off cycles this moisture drains into a trough and down through a hose to the drain pan. (See Figure 3-7)

The drain hose must be directly above the drain pan or water may leak onto the base of unit (See Figure 3-8).

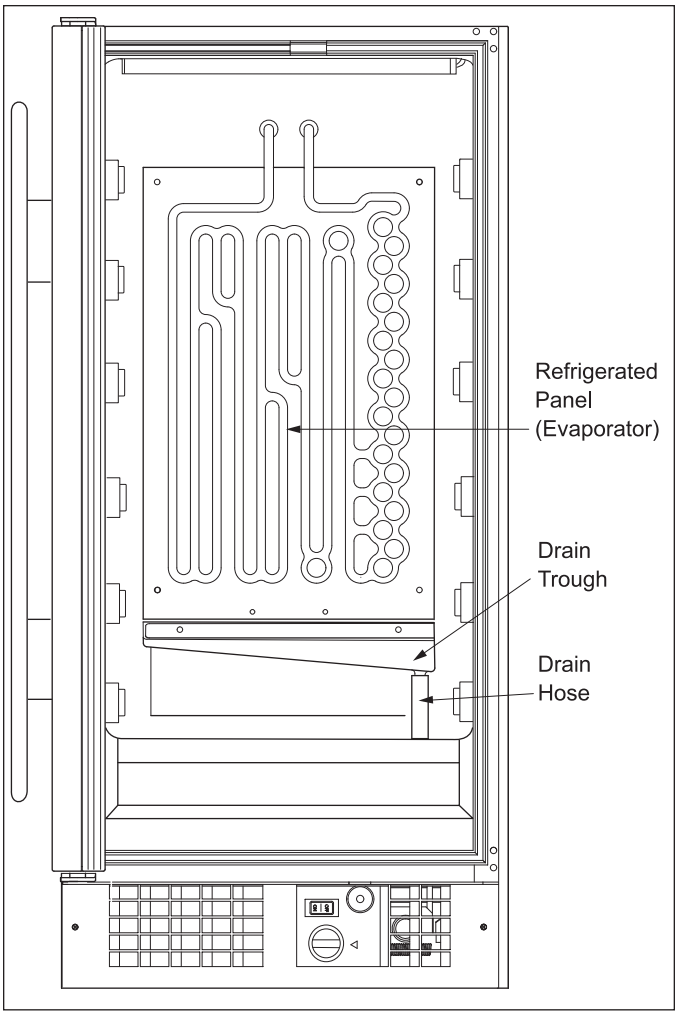

Figure 3-7. Drain System

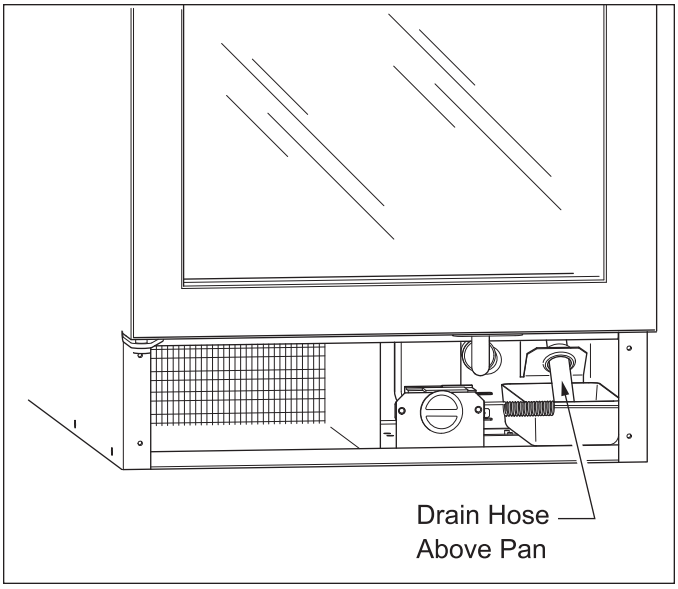

Figure 3-8. Drain Hose

HFC-134a REFRIGERANT SERVICE INFORMATION

The sealed system contains HFC-134a refrigerant. This section of the manual provides general rules for working with 134a, and procedures to be followed while servicing the sealed system. This is followed by diagrams illustrating sealed system operation, then a refrigerant flow diagrams.

⚠ CAUTION

- **134a refrigerant requires Synthetic Ester oil in the compressor, and does not tolerate contamination from other refrigerants, moisture, petroleum-based lubricants, silicone lubricants, cleaning compounds, rust inhibitors, leak detection dyes, or any other type of additive.**
- **If servicing the sealed system, do not leave it nor any replacement components open to the atmosphere for more than ten (10) minutes, as the Synthetic Ester oil will attract moisture.**

General Rules for Working with 134a Refrigerant:

- Use equipment dedicated to 134a sealed system service only.
- Use only 134a refrigerant for back-flushing and sweep charging.
- Always replace the high-side filter-drier when servicing the sealed system.
- The high-side filter-drier must be cut from the sealed system. Never un-braze any sealed system joint as the heat will drive moisture into the sealed system.
- Do not leave the sealed system nor replacement compressor open to the atmosphere for more than then ten (10) minutes.
- When the rubber plugs are pulled from the service compressor, a release of pressure should be heard. If no release of pressure is heard, do not use the compressor.
- Use ONLY virgin 134a refrigerant when recharging the sealed system.

SEALED SYSTEM REPAIR PROCEDURES	
Problem	**Service Procedures**
Non-Operating, Inefficient, Noisy Compressor *(**NOTE**: To check for a non-operating compressor, a hard start kit can be used)*	a. Capture refrigerant b. Replace compressor c. Replace filter-drier d. Evacuate or sweep charge system e. Recharge system with Virgin 134a refrigerant
High Side leak	a. Capture refrigerant b. Repair leak c. Replace filter-drier d. Evacuate or sweep charge system e. Recharge system with Virgin 134a refrigerant
Low Side Leak	a. Capture refrigerant b. Repair leak (if at solder joint) or replace part c. Back flush high side of sealed system d. If all refrigerant has escaped and system is in a vacuum, replace compressor e. Replace filter-drier f. Evacuate or sweep charge system g. Recharge system with Virgin 134a refrigerant
Contaminated System *Examples:* > *Burned out compressor* > *Excessive moisture from leak in condensate loop or in low side* > *Plugged capillary tube*	a. Capture refrigerant b. Repair leak (if at solder joint) or replace part c. Back flush high side of sealed system d. Replace compressor e. Replace filter-drier f. Replace heat exchanger if cap tube is clogged g. Install a low side drier on suction line h. Evacuate or sweep charge sealed system i. Recharge with Virgin134a refrigerant
Restriction *(**NOTE**: If restriction is due to sealed system being contaminated, see Contaminated Sealed System above.)*	a. Capture refrigerant b. Locate and remove restriction or locate and replace part c. Back flush high side of sealed system d. Replace filter-drier e. Evacuate or sweep charge system f Recharge system with Virgin 134a refrigerant.
Overcharge	a. Capture refrigerant b. Replace filter-drier c. Evacuate or sweep charge system d. Recharge system with Virgin 134a refrigerant

SEALED SYSTEM OPERATION

The following six diagrams represent the basic model 315W sealed system. The components are listed in order of refrigerant flow, with an explanation of their fundamental role as part of a sealed system.

Compressor (Figure 4-1)

The compressor creates a high and low side pressure difference in the sealed system. When the compressor piston pushes, compressing the refrigerant gas, it causing the refrigerant pressure and temperature to rise.

The high-pressure/high-heat refrigerant gas is pushed out the compressor discharge tube to the condenser.

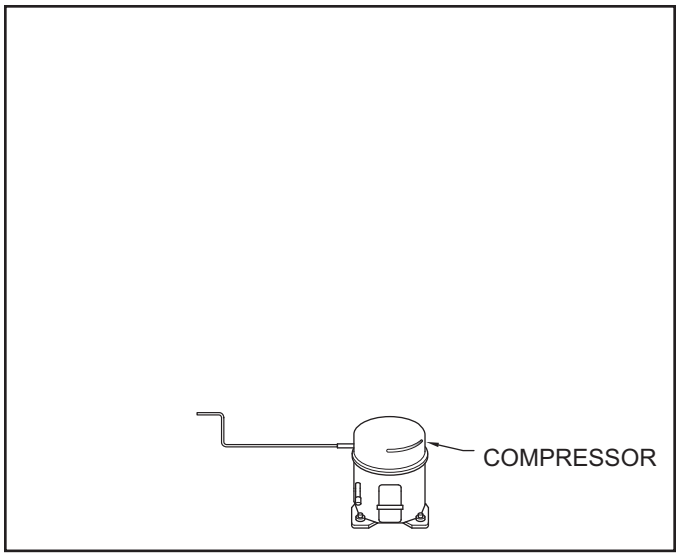

Figure 4-1. Compressor

Condenser (Figure 4-2)

The high-pressure/high-heat gas travels through the condenser tubing, where most of the heat in the refrigerant is drawn out and dissipated into the room by the cooler ambient air that is being drawn over the condenser tubing *(referred to as heat transfer)*. This changes the gas into a high-pressure warm liquid before it enters the high-side filter-drier.

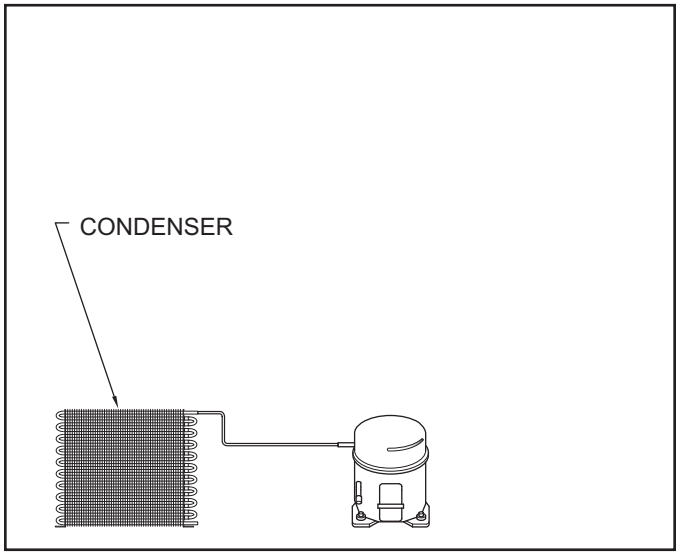

Figure 4-2. Condenser

Filter-Drier (Figure 4-3)

The high-pressure warm liquid travels through the high-side filter-drier, where the desiccant pellets inside the drier remove moisture from the refrigerant before it enters the capillary tube.

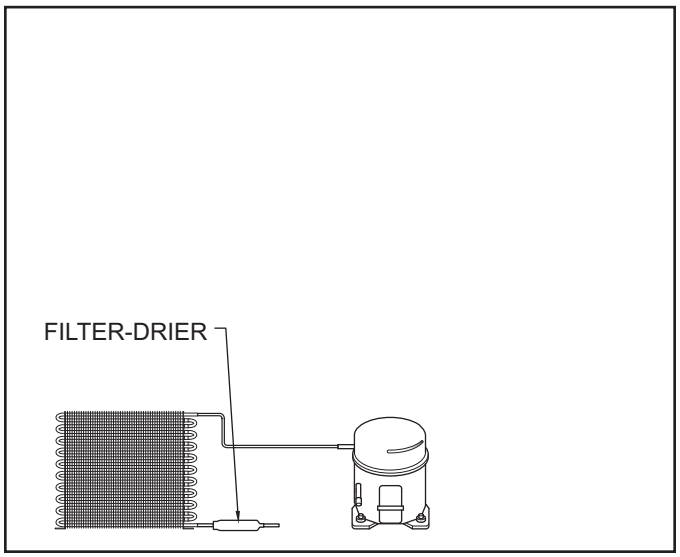

Figure 4-3. Filter- Drier

Capillary Tube (Figure 4-4)

The high-pressure warm liquid refrigerant travels through the long skinny capillary tube which is soldered to the suction tube *(these two tubes soldered together create the heat exchanger). (See Suction Tube & Heat Exchanger below.)* As the warm liquid refrigerant travels through the capillary tube it gives up heat to the cool refrigerant gas traveling through the suction tube and the pressure drops, so it is a low-pressure/cool liquid before it enters the evaporator.

Evaporator (Figure 4-5)

As the low-pressure/cool liquid refrigerant enters the evaporator, it vaporizes. This is caused by a dramatic pressure change, occurring when the refrigerant from the smaller diameter capillary tubing enters the larger diameter evaporator tubing. This refrigerant vapor travels through the evaporator, absorbing heat from the compartment, gradually converting the refrigerant to a cool gas. This cool refrigerant gas then enters the suction tube.

Suction Tube & Heat Exchanger (Figure 4-6)

The cool gas travels through the suction tube which is soldered to the capillary tube *(as mentioned earlier, these two tubes soldered together create the heat exchanger).* As this cool refrigerant gas travels through the suction tube it absorbs heat from the warm liquid refrigerant traveling through the capillary tube, making it a luke warm gas. The lukewarm refrigerant gas is pulled back to the compressor (via vacuum force), where the process begins again.

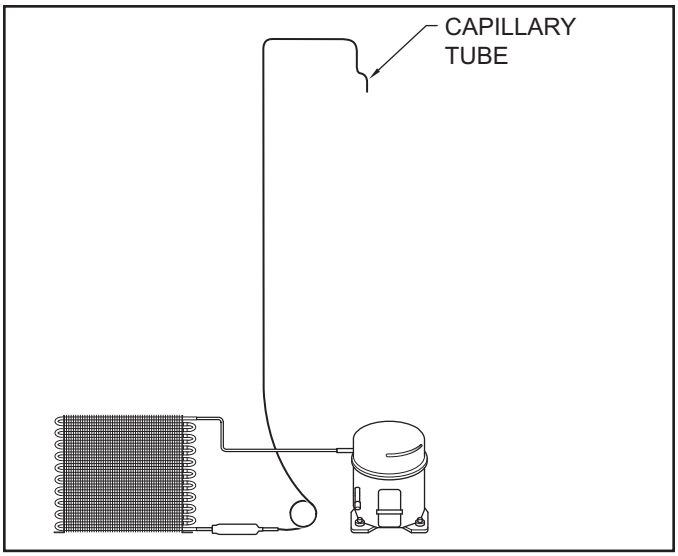

Figure 4-4. Capillary Tube(s)

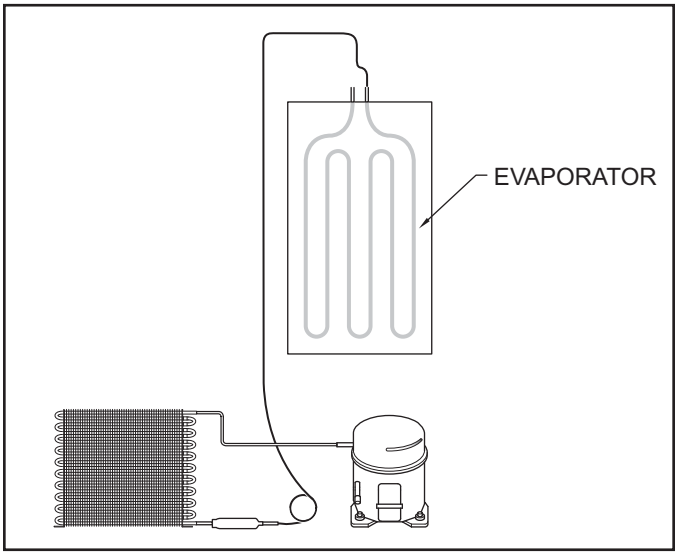

Figure 4-5. Evaporator(s)

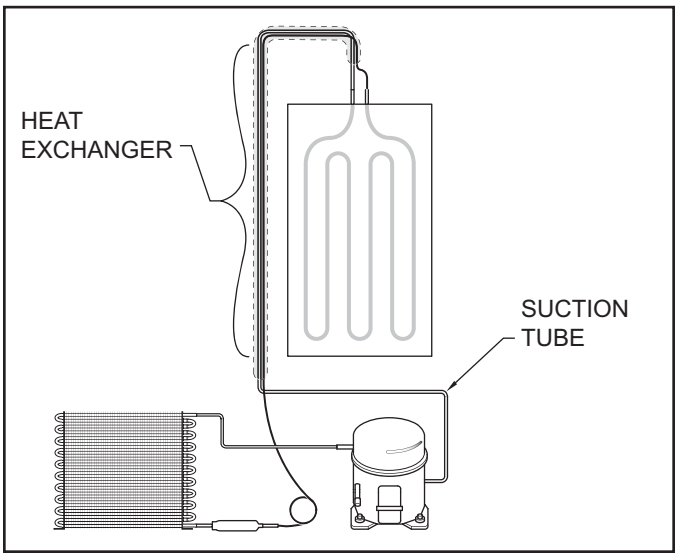

Figure 4-6. Suction Line & Heat Exchanger

REFRIGERANT FLOW DIAGRAM

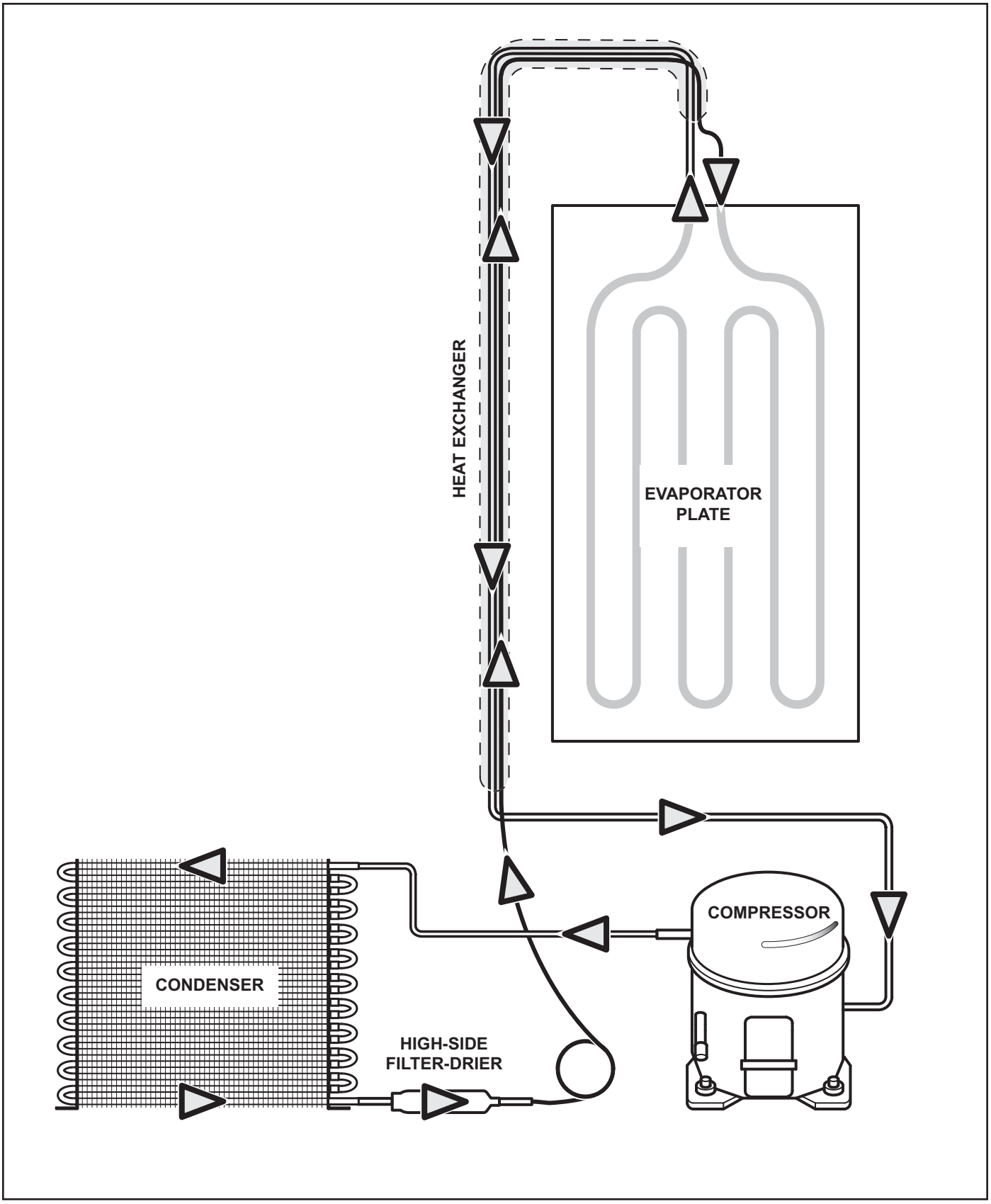

Figure 4-7. Model 315W Refrigerant Flow

COMPONENT ACCESS AND REMOVAL

This section explains how to adjust, access and remove components from a model 315W.

This section is arranged as follows:

- **EXTERIOR COSMETIC AND MECHANICAL COMPONENTS**
- **INTERNAL COMPONENTS**
- **SEALED SYSTEM COMPONENTS**

An attempt has been made to arrange these procedures in such a way as to simulate which components would need to be removed first in order to gain access to other components. When following a component removal procedure, it may be necessary to reference another component removal procedure listed earlier in this section.

NOTE: *Before continuing, take note of the WARNINGS and CAUTIONS below.*

⚠ WARNING

- **TO AVOID ELECTRIC SHOCK, POWER TO THE UNIT MUST BE DISCONNECTED WHENEVER ACCESSING AND/OR REMOVING COMPONENTS POWERED BY ELECTRICITY OR COMPONENTS NEAR OTHER ELECTRICAL COMPONENTS.**
- **IF REMOVING A DOOR FROM A UNIT, REMEMBER THAT DOORS ARE HEAVY. IF THEY WERE TO FALL, THEY COULD CAUSE SERIOUS PERSONAL INJURY.**

⚠ CAUTION

- **If working in the compressor area, be aware that compressor and tubing may be hot.**
- **If working on or around the condenser, be aware that condenser fins are sharp.**

EXTERIOR COSMETIC AND MECHANICAL COMPONENTS

Kickplate

The kickplate, located under the door assembly, is vented to allow air flow through the compressor area.

To remove the kickplate (See Figure 5-1):

1. Open door.
2. Pull temperature control knob from thermostat shaft.
3. Extract the mounting screws from each end of kickplate and pull kickplate forward.

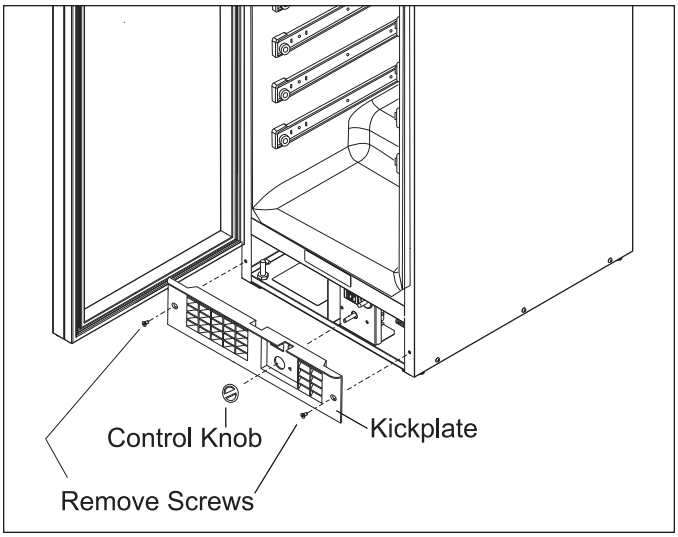

Figure 5-1. Kickplate Removal

Door Gasket and Door Handle

The door gasket is held in place by pressing the spline of the gasket into a channel in the door assembly. The door handle is secured to the door with screws that pass through the door assembly and standoffs, into the handle. The heads of thee screws are hidden in the gasket channel, covered by the gasket.

To remove a gasket and/or handle (See Figure 5-2):

1. Open door.
2. Pull door gasket from channel of door.
3. Extract the door handle mounting screws and pull the handle and standoffs from the door.

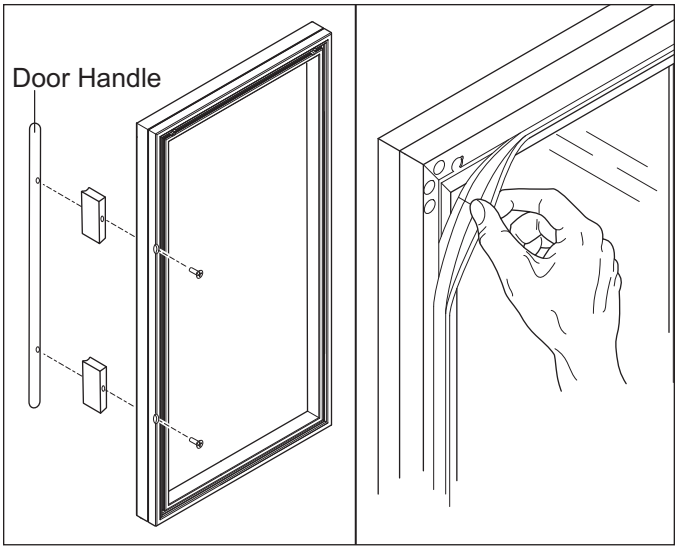

Figure 5-2. Door Handle and Gasket Removal

Door and Door Hinge

To remove the door and hinges (See Figure 5-3):

1. Open door so door hinge mounting screws are visible.
2. Extract bottom door hinge mounting screws.
3. While holding door assembly, extract top door hinge mounting screws.
4. Remove door assembly from unit.

   NOTE: *When removing the door, be aware of the spacer bushings between the hinge and door assembly so they are not lost.*
5. Remove the cabinet hinges by extract the screws securing the hinges to the unit frame.

   NOTE: *Depending on unit installation, it may be necessary to extract unit from its installed position to access the cabinet hinge screws.*

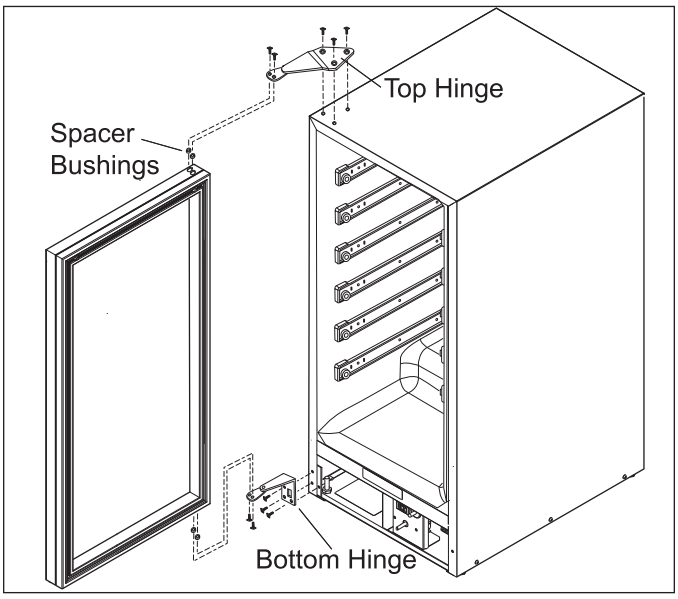

Figure 5-3. Door and Hinge Removal

Light Switch Actuator

The light switch actuator is attached to the bottom of the door assembly with screws. To remove the actuator (See Figure 5-4):

1. Open door.
2. Extract screws securing switch actuator to door frame.

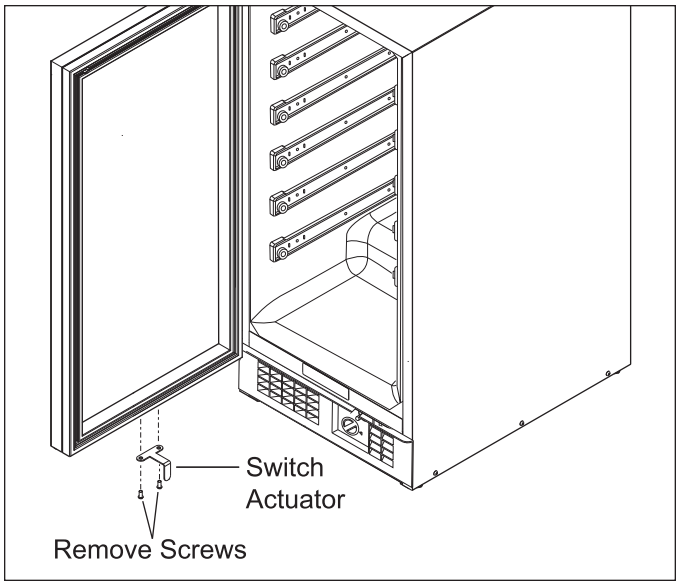

Figure 5-4. Light Switch Actuator Removal

Back Cabinet Cover and Insulation Pack

NOTE: *Electrical shock hazard, take note of WARNINGS and CAUTIONS on page 5-2.*

In order to remove components from the back of the unit, the appliance will need to be removed from its installation site.

To remove the back cover and insulation pack (See Figure 5-5):

1. Extract screws from the back cover securing it to the cabinet case.
2. Remove back cover with the baffle and the insulation pack.

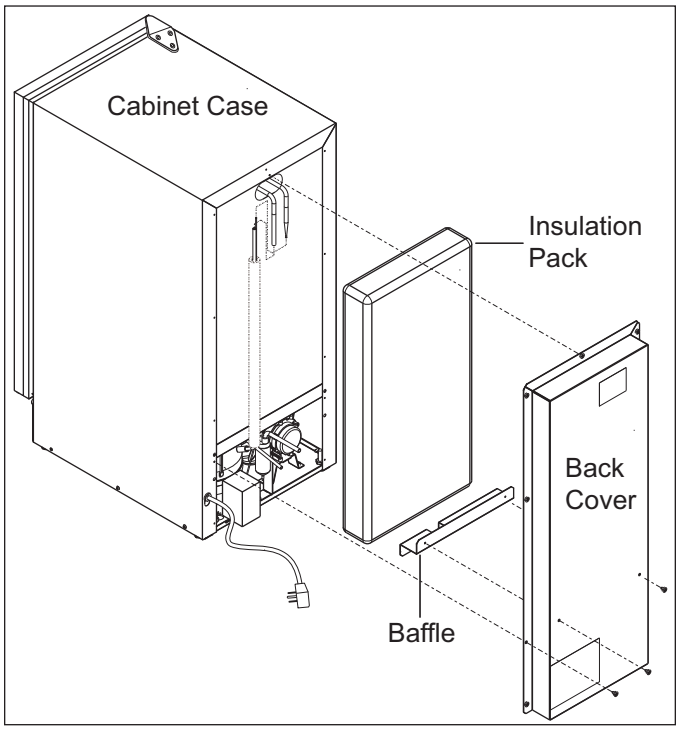

Figure 5-5. Back Cover Removal

Power Cord

NOTE: *Electrical shock hazard, take note of WARNINGS and CAUTIONS on page 5-2.*

The power cord is located at the right rear of the unit.

To access the power cord, the unit will need to be moved out from its installation position. The back cover and insulation pack must be removed first, then, (See Figure 5-6):

1. With a flat bladed screwdriver remove electrical cover from rear of unit.
2. Disconnect wire leads.
3. Remove power cord strain relief from cabinet case and extract cord from unit.

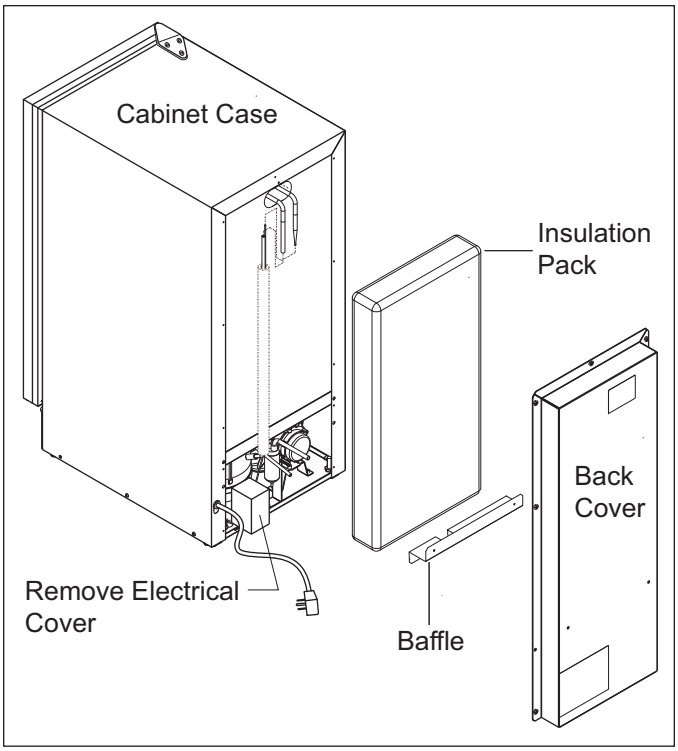

Figure 5-6 Power Cord Removal

Separating Cabinet Case from Unit Base

In order to access components located in the compressor area, the cabinet case must be separated from the unit base.

NOTE: *The cabinet case cannot be completely separated from the unit base unless the heat exchanger is severed.*

To separate cabinet case from unit base (See Figure 5-7):

1. Remove door assembly, wine racks, and back cover with the insulation pack.

   NOTE: *Removal of the door and wine racks is recommended for safety and for weight reduction when lifting and separating the cabinet.*
2. Extract screws from bottom sides of cabinet case.
3. The cabinet case may be separated two ways.
   a. For servicing the light switch, thermostat, or drain pan, it may only be necessary to use a spacer (*a piece of 2x4 lumber works well*) to lift the front of the cabinet case enough to allow access.
   b. For servicing the sealed system, the case may be removed from the unit base by carefully lifting the cabinet case above the sealed system components mounted to the unit base, and turning the case to the right.

⚠ CAUTION

When lifting and turning the cabinet case, be mindful of the sealed system components so they are not crimped or damaged.

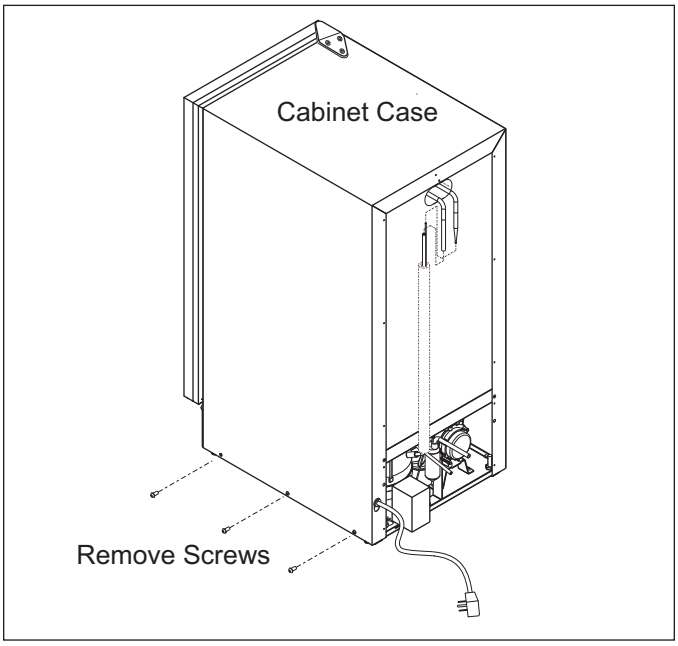

Figure 5-7. Cabinet Case Removal

Light Switch and Plunger Switch

NOTE: Electrical shock hazard, take note of WARNINGS and CAUTIONS on page 5-2.

The switches are inserted into a bracket located behind the kickplate at the bottom front of unit.

To remove the light switch or plunger switch, the unit must be pulled from its installation and the kickplate must be removed first, then (See Figure 5-8):

1. From the bottom of the appliance, extract the screws that secure the bracket and pull the bracket forward.
2. Disconnect wire leads from switch.
3. Depress retaining clips at sides of switch and push switch out through mounting bracket.

Thermostat

NOTE: Electrical shock hazard, take note of WARNINGS and CAUTIONS on page 5-2.

The thermostat is attached to a bracket located behind the kickplate at the bottom front of unit. The thermostat bulb runs to the rear of the unit, up the back and into the refrigerated compartment. The coiled end of the thermostat bulb is attached to the bottom rear of the evaporator plate with a bracket and screws.

To remove the thermostat, the unit must first be pulled from its installation, and the back cabinet cover, as well as the kickplate must be removed, then (See Figure 5-8):

1. From inside unit:
   a. Extract screws securing the thermostat bracket to bottom rear of the evaporator.
   b. Pull coiled end of thermostat bulb from the compartment.
2. At bottom of unit:
   a. Extract the screws that secure the bracket to the base and pull bracket forward.
   b. Disconnect wire leads from thermostat and pull thermostat bulb toward front of unit.

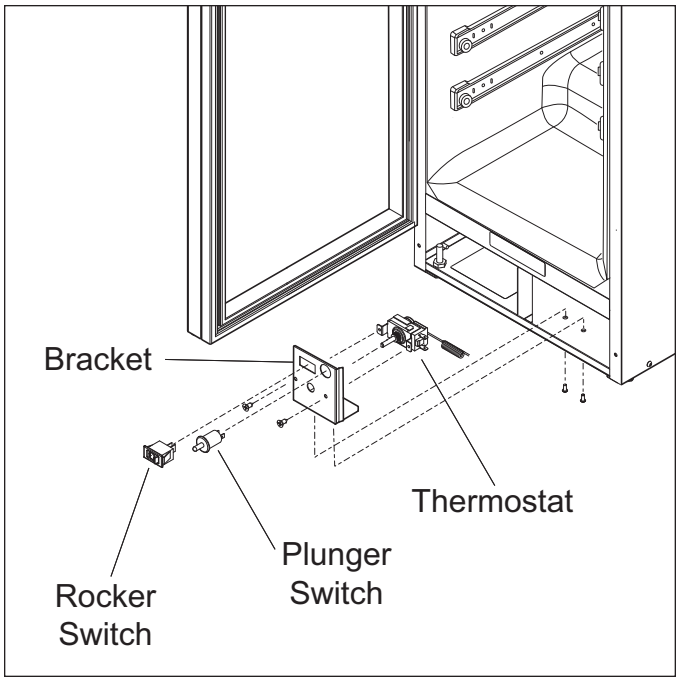

Figure 5-8. Light Switch, Plunger Switch and Thermostat Removal

INTERNAL COMPONENTS

Wine Racks

To remove a wine rack assembly (See Figure 5-9):

1. Pull rack forward until it stops.
2. Lift front of rack up while pulling forward.
3. After indentations on the wine rack clear the rollers on the cabinet slides, lower front of rack while continuing to pull forward and lifting rear of rack.

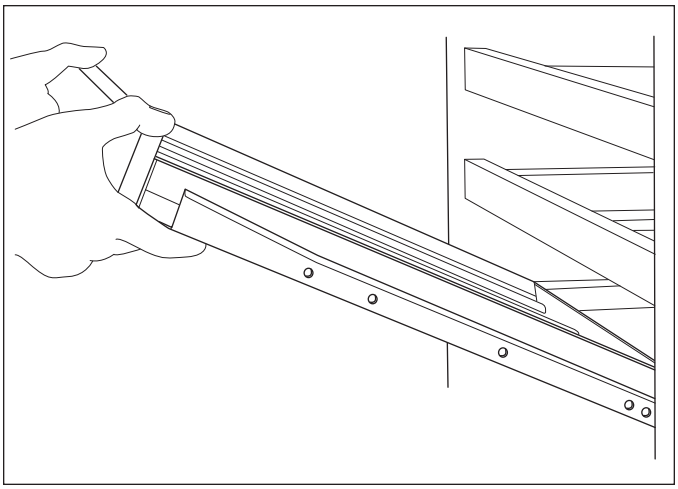

Figure 5-9. Wine Rack Assembly Removal

Cabinet Slide and Spacer

Cabinet slides are attached to the side walls with screws. On the handle side, a narrow plastic spacer sits between the slide and side wall. On the hinge side, a wide plastic support spacer sits between the slide and wall.

To remove a cabinet slide, the wine rack must be removed first, then extract the Phillips head mounting screws and pull the slide and slide spacer from the wall. (See Figure 5-10)

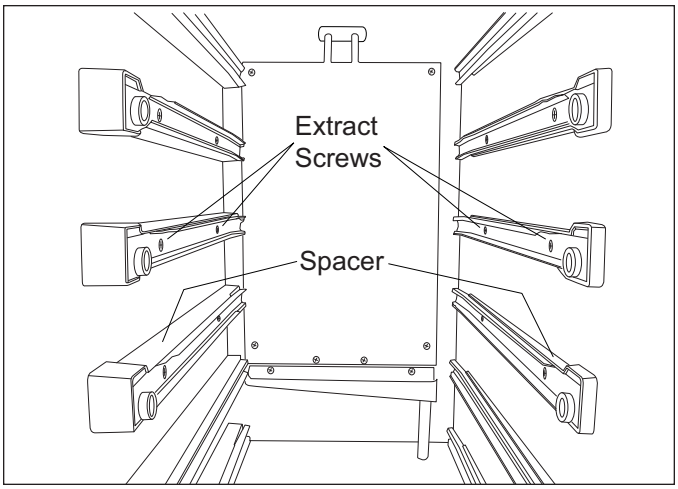

Figure 5-10. Slide and Spacer Removal

Light Bulb and Light Housing

The light bulb is located at the inside top of the appliance and is protected by the light housing.

NOTE: *Electrical shock hazard, take note of WARNINGS and CAUTIONS on page 5-2.*

To remove the light bulb and light housing. (See Figure 5-11)

1. Remove top wine rack.
2. Pull electrical plug from socket at top of the compartment.
3. Remove the bulb from holder.
4. If bulb housing needs to be replaced, extract screws securing bulb housing to the top of the compartment.

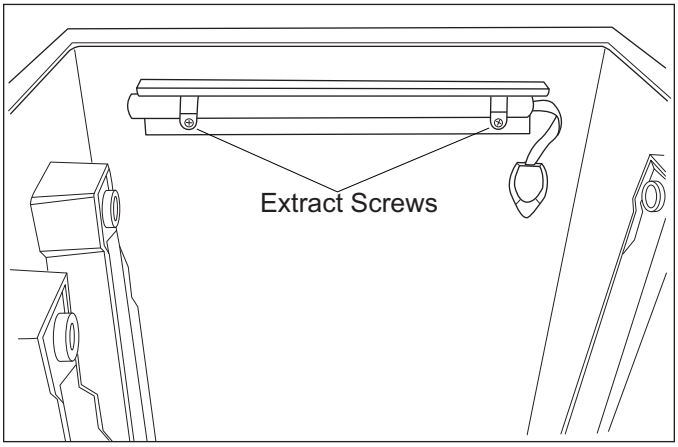

Figure 5-11 . Light Bulb and Housing Removal

COMPRESSOR AREA MECHANICAL & SEALED SYSTEM COMPONENTS

NOTE: *To remove any sealed system component, the unit must be pulled from its installation.*

NOTE: *Always replace the high-side filter-drier when servicing the sealed system.*

NOTE: *Due to the limited access under the 315W, it will be necessary to separate the cabinet case from the unit base to access components in the compressor area.*

Condenser Fan Motor and Fan Shroud

The condenser fan motor is located at the left rear corner of the unit tray, and is held in place with screws passing up from under the unit tray into the condenser fan motor mounting brackets.

To access the condenser fan motor, the unit will need to be pulled from its installation, and the cabinet case separated from the unit base, then (See Figure 5-12):

1. Disconnect condenser fan motor wire leads.
2. Extract mounting screws from condenser fan bracket, then lift condenser fan motor assembly off of unit base
3. Extract mounting screws securing condenser fan shroud to condenser, then pull fan shroud off of unit base.
4. To remove fan blade from fan motor, extract locking nut from fan motor shaft and pull fan blade from fan motor shaft.

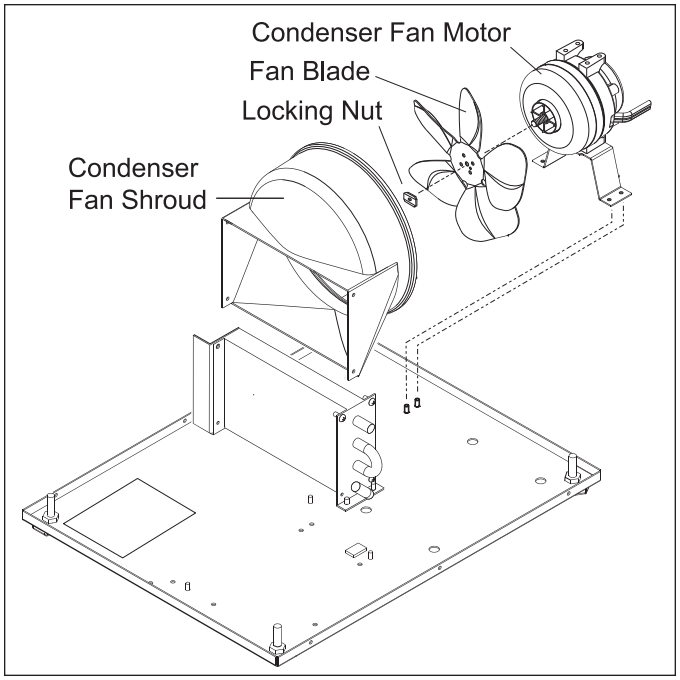

Figure 5-12. Condenser Fan Motor Removal

Evaporator Assembly and Filter-Drier

The evaporator assembly consists of the evaporator and heat exchanger. The evaporator is mounted to the inside rear wall of unit. The heat exchanger is routed out the back wall, down to the unit tray where the capillary tube is connected to the high-side filter-drier and the suction tube is attached to the compressor suction port.

To remove an evaporator assembly (See Figures 5-13, 5-14, 5-15):

1. Evacuating refrigerant from sealed system.
2. From back of the unit use a tin snips or similar tool to cut heat exchanger as close to back wall as possible.
3. Extract screws securing evaporator to rear wall of refrigerated compartment, then pull evaporator from compartment.
4. With a tube-cutter, cut filter-drier from condenser outlet, and suction tube from compressor.

   NOTE: *After new evaporator assembly is installed, the tubing channel must be sealed shut with silicone.*

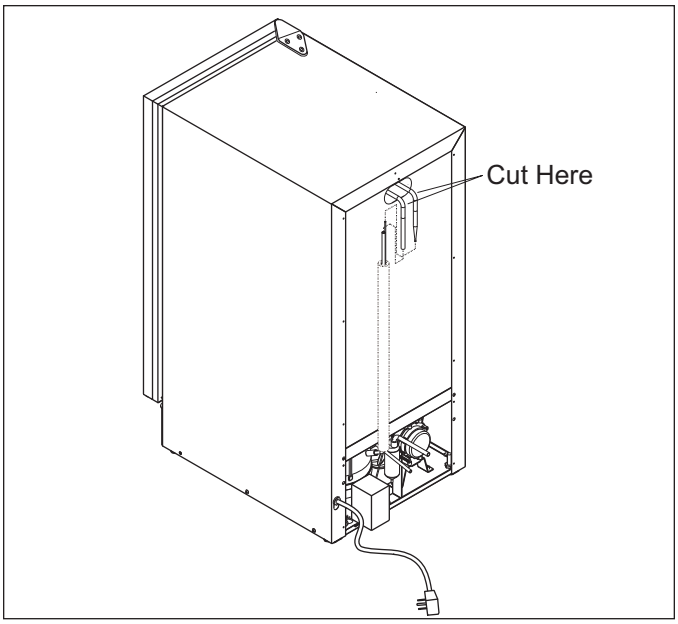

Figure 5-13. Cut Heat Exchanger

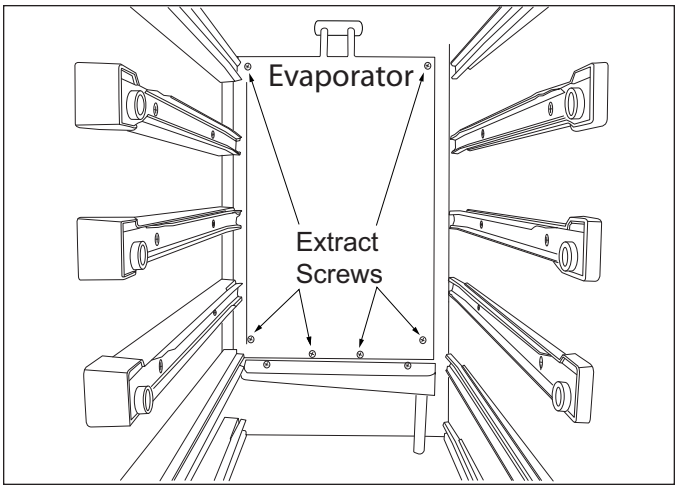

Figure 5-14. Evaporator Removal

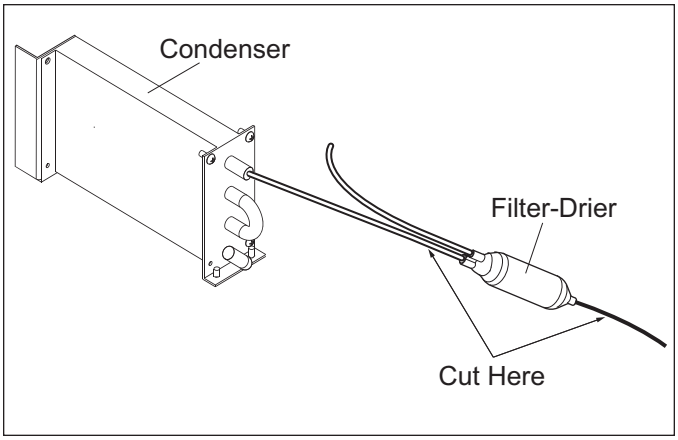

Figure 5-15. Cut Drier Inlet & Outlet

Compressor

NOTE: Always replace the high-side filter-drier when servicing the sealed system.

NOTE: Due to the limited access under the 315W, it will be necessary to separate the cabinet case from the unit base to access components in the compressor area.

The compressor is located at the back of the unit base.

To access the compressor, the unit will need to be pulled from its installation.

With unit out of installation and case separated from unit base (See Figures 5-16):

1. Disconnect compressor electricals.
2. With a tube-cutter, cut suction tube and discharge tube approximately 1-1/2" from compressor.
3. Remove cotter pins and washers from compressor mounting brackets, then lift compressor off of mounting brackets.

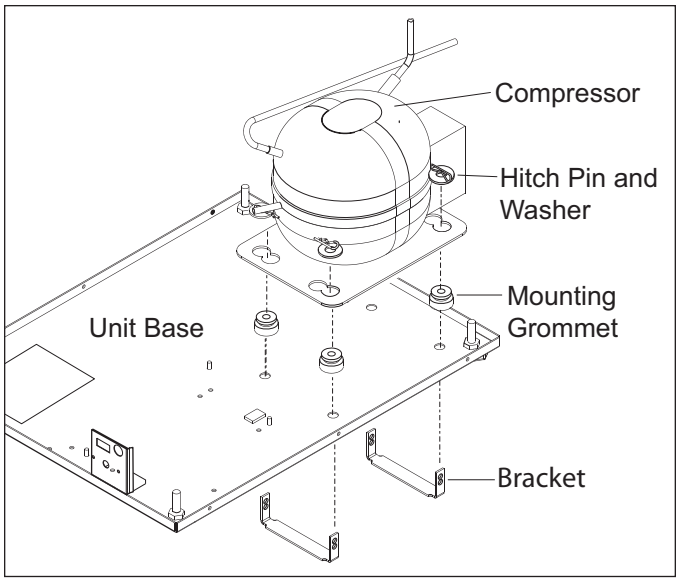

Figure 5-16. Unit Tray Component Access

Condenser

NOTE: Always replace the high-side filter-drier when servicing the sealed system.

NOTE: Due to the limited access under the 315W, it will be necessary to separate the cabinet case from the unit base to access components in the compressor area.

The condenser is located on the left side of the unit base, and is held in place with screws passing up from under unit base into the condenser mounting brackets.

To access the condenser, the unit will need to be pulled from its installation, and the cabinet case separated from the unit base, then, (See Figure 5-17):

1. With a tube-cutter, cut inlet tube and outlet tube approximately 3" from the condenser.
2. Extract condenser mounting screws from unit base and from side brackets.
3. Extract screws securing the condenser fan shroud to the condenser and remove fan shroud.

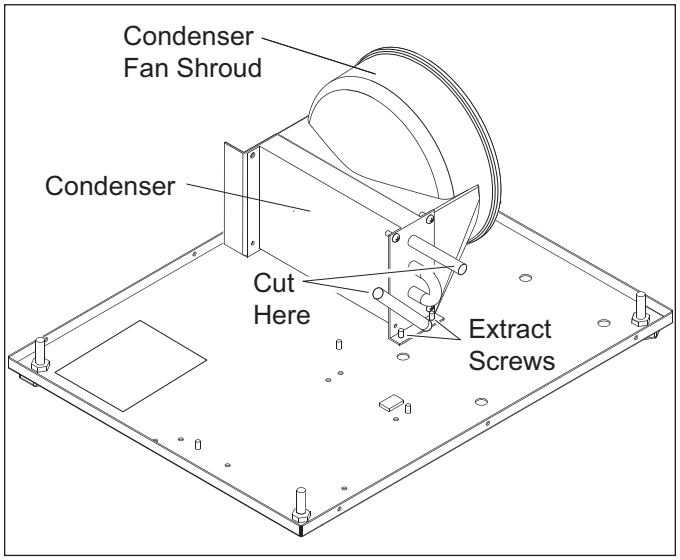

Figure 5-17. Condenser Removal

General Troubleshooting Guide

The Table of Contents below indicates how the General Trouble Shooting Guide is arranged.

1. As close as possible, match the complaint, or description of the problem the unit is experiencing, with those in the table of contents below.
2. To the left of the problem description below, take note of the letter.
3. Locate that letter in the left column of the General Troubleshooting Guide.
   a. In the center column of the General Troubleshooting Guide is a list of possible causes for the problem.
   b. The information in the right column explains what tests and/or corrective actions to perform.

Ltr	Problem Description	Page #
A.	**Warm Temperatures and/or Unit Runs too Long**	7-3
B.	Thick Frost On Evaporator	7-3
C.	Noise	7-4
D.	**Lighting Not Working Properly**	7-4
E.	**Water Running From Inside Cabinet**	7-4
F.	**Water Under Appliance**	7-4
G.	**Unit Not Level**	7-4

PROBLEM	POSSIBLE CAUSE	TEST / ACTION
A. Warm Temperatures and/or Unit Runs too Long	**Unit Switched Off**	Check Temperature Control
	Temperature Control Out of Adjustment	Check adjustment.
	Unit Recently Energized	Allow time for unit to cool down.
	Unit Recently Stocked with Wine	Allow unit many hours to cool warm product.
	High Room Ambient Temperature and/or Unit in Direct Sunlight	Instruct Customer unit performs best between 60°F (16°C) - 90°F (32°C), no direct sunlight.
	Door Ajar a. Wine Rack Obstruction b. Door out of Adjustment c. Door or Cabinet Hinge Problem d. Door Gasket Not Tight	a. Adjust wine rack b. Adjust door. c. Check hinges. Replace if defective. d. Check gasket fit. Replace if needed.
	Condenser Air Flow / Fan Fault a. Dirty Condenser b. Fan Blade Loose or Obstructed c. Fan Motor Disconnected or Malfunctioning	a. Check/clean condenser. b. Tighten blade or move obstruction. c. Check fan motor operation. Check fan motor electrical connections back to compressor. Check for 115V AC from fan motor to compressor. Reconnect or repair wires, or replace motor if defective.
	Thermostat Fault	Replace thermostat if defective.
	Compressor Fault a. Compressor Electricals Disconnected or Malfunctioning or Compressor Inefficient, or Locked	a. Check integrity of compressor electricals. Correct wiring problems or replace compressor electricals if defective. b. Check AMP draw on compressor. If high by 15% or more, replace compressor.
	Sealed System Leak or Restriction	SEE SEALED SYSTEM DIAGNOSTIC INFORMATION
B. Thick Frost On Evaporator	**Door Ajar** a. Wine Rack Obstruction b. Door out of Adjustment c. Door or Cabinet Hinge Problem d. Door Gasket Not Tight	a. Adjust wine rack b. Adjust door. c. Check hinges. Replace if defective. d. Check gasket fit. Replace if needed.
	Thermostat Not Keeping Unit Off Long Enough.	Thermostat should cut-in ~ 44°F (7°C) evaporator temperature. Cut-out temperature will vary. Tighten thermostat bracket at bottom of evaporator plate, or replace thermostat if defective.
	Sealed System Leak	SEE SEALED SYSTEM DIAGNOSTIC INFORMATION

PROBLEM	POSSIBLE CAUSE	TEST / ACTION
C. Noise	**Condenser Fan Noise**	May be normal. Check for noises made from vibration.
	Fan Blade Contacting Shroud	Check for free fan blade rotation. Adjust or replace components as needed.
D. Lighting Not Working Properly	**Light Bulb Burned Out**	Replace bulb.
	Wiring or Bulb Socket Fault	Check bulb socket and wiring. Repair or replace components as needed.
	Door Switch Does Not Close	Check door switch and switch actuator alignment. Add, adjust or replace as needed. Check switch, replace if defective.
	Cannot Switch Lights On With Door Closed	Check rocker switch. Replace if defective.
E. Water Running From Inside Cabinet	**Drain Trough Hose Plugged**	Clean hose, replace if damaged. Clean trough
F. Water Under Appliance	**Drain Trough Hose Plugged**	Clean hose, replace if damaged. Clean trough
	Drain Hose Out of Position	Drain hose must be directly over drain pan. Adjust positioning of hose and/or drain pan.
	Drain Pan Over-filling	Check door and door gasket for proper fitting. Adjust as needed, replacing defective parts.
G. Unit Not Level	**Legs Out of Adjustment**	Turn legs until unit is level and secure.

SEALED SYSTEM DIAGNOSTIC INFORMATION

NOTE: *The temperature/pressure table at right is for reference only. A unit's temperature/pressure correlation may differ from those listed due to: set-points, where the sealed system is in the refrigeration cycle, ambient temperature, etc.*

If a unit is experiencing temperature problems, it is recommended to reference the General Troubleshooting Guide before accessing the sealed system. After all mechanical and electrical components have been ruled out, sealed system pressures can be checked and compared against those listed in the tables below.

NOTE: *Whenever entering the sealed system, always use solder-on process valves. Do **NOT** use bolt-on process valves as they are prone to leak.*

NOTE: *Whenever servicing the sealed system, the high-side filter-drier assembly must be replaced.*

TEMPERATURE / LOW-SIDE PRESSURE CORRELATION

Temperature	Pressure
-30°F (-34°C)	10” Vac
-25°F (-32°C)	7” Vac
-20°F (-29°C)	4” Vac
-15°F (-26°C)	0” Vac
-10°F (-23°C)	2 Psi
-5°F (-21°C)	4 Psi
0°F (-18°C)	7 Psi
5°F (-15°C)	9 Psi
10°F (-12°C)	12 Psi
15°F (-9°C)	15 Psi
20°F (-7°C)	18 Psi
25°F (-4°C)	22 Psi
30°F (-1°C)	26 Psi
35°F (2°C)	30 Psi
40°F (4°C)	35 Psi
45°F (7°C)	40 Psi
50°F (10°C)	45 Psi
55°F (13°C)	51 Psi
60°F (16°C)	57 Psi
65°F (18°C)	64 Psi
70°F (21°C)	71 Psi
75°F (24°C)	78 Psi

NORMAL OPERATING PRESSURES

Model	Normal Low Side Pressures	Normal High Side Pressures
315W	**0 psi to 38 psi**	**90 psi to 115 psi**

PRESSURE INDICATIONS

If low side pressure is	*& high side pressure is*	*possible problem is*
NORMAL	*NORMAL*	*MECHANICAL (see General Troubleshooting Guide)*
LOW	*LOW*	*LEAK*
LOW	*HIGH*	*RESTRICTION*
HIGH	*LOW*	*INEFFICIENT COMPRESSOR*
HIGH	*HIGH*	*OVER CHARGE*

Model 315W

	Model 315W
CHARGE (R-134a Refrigerant) ***NOTE:*** *Always check serial tag for exact charge*	2.75 oz. (81.33 ml)
NORMAL OPERATING PRESSURES *(At 70°F / 21°C)*	
Low Side	0 psi to 38 psi
High Side	90 psi to 115 psi
COMPRESSOR ***NOTE:*** *Always check current parts price list for possible substitutions.*	
Service Package Part No.	18880221
Manufacturer	Embraco
Mfg. Part No.	EMI30HER
Original Compressor / Service Compressor Running Amps	1.1 / 1.1
Original Compressor / Service Compressor BTU Rating	280 / 280
DEFROST METHOD	"Off Cycle Defrost"
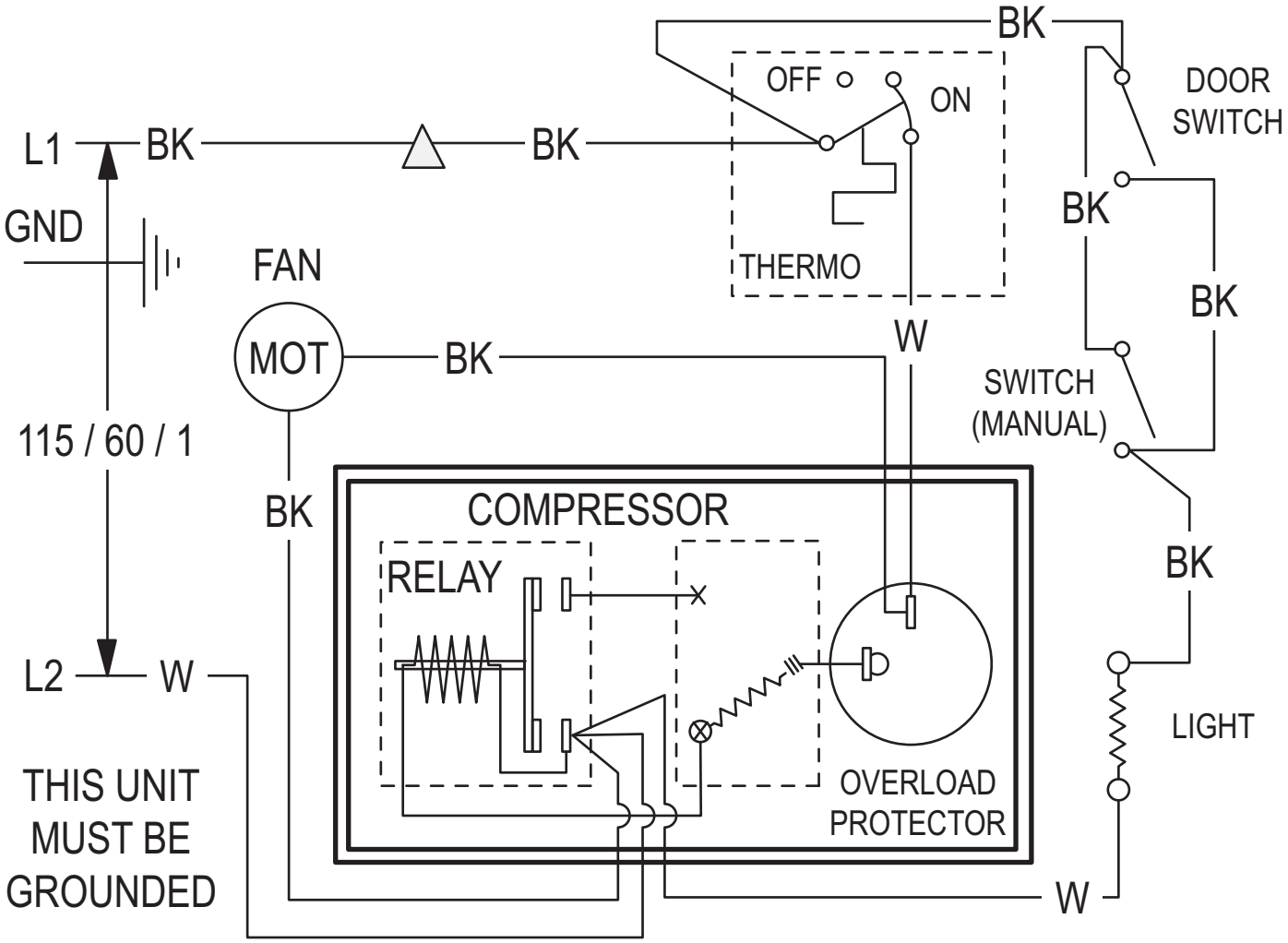
315W Wiring Diagram / Schematic